

TeamConnect Ceiling 2

Ceiling microphone array

PDF export of the original HTML manual

Contents

1. Preface 3

2. Product overview 4

Delivery includes 4

Top and bottom 5

Connectors and controls 7

Accessories 8

3. Planning and installation 10

Connecting to a network 10

Outputting analog audio signals 11

Outputting digital audio signals 13

Planning the installation 15

4. Installation and startup 18

Variant 1: installed flush in a dropped/coffered ceiling 18

Variant 2: directly below the ceiling 25

Variant 3: suspended from the ceiling 27

Mounting the TeamConnect Ceiling 2 on a VESA mount 31

Configuring the TeamConnect Ceiling 2 with the Sennheiser Control Cockpit 33

Configuring the TeamConnect Ceiling 2 with a media control system 36

5. Specifications 37

Specifications 37

Speech transmission index 40

Cleaning and maintenance 41

6. Regulatory information 42

1. Preface

PDF Export of the Original HTML Manual

This PDF document is an automatic export of an interactive set of HTML manuals. Some content and interactive elements may not be included in the PDF because they cannot be displayed in this format. In addition, automatically generated page breaks may cause related content to be slightly shifted. We can therefore only guarantee the completeness of the information in the HTML manual and recommend using it. You can find it in the Documentation Portal at www.sennheiser.com/documentation.

2. Product overview

Information about the scope of delivery, the device's structure and connections, and available accessories.

Delivery includes

Top and bottom

Connectors and controls

Accessories

Delivery includes

- TeamConnect Ceiling 2 ceiling microphone
- 3-pin Phoenix connector (3.81)
- 8 self-adhesive rubber feet
- 2 eye bolts (M4 x 10)
- Instruction manual
- Manufacturer declaration sheet

Top and bottom

Top

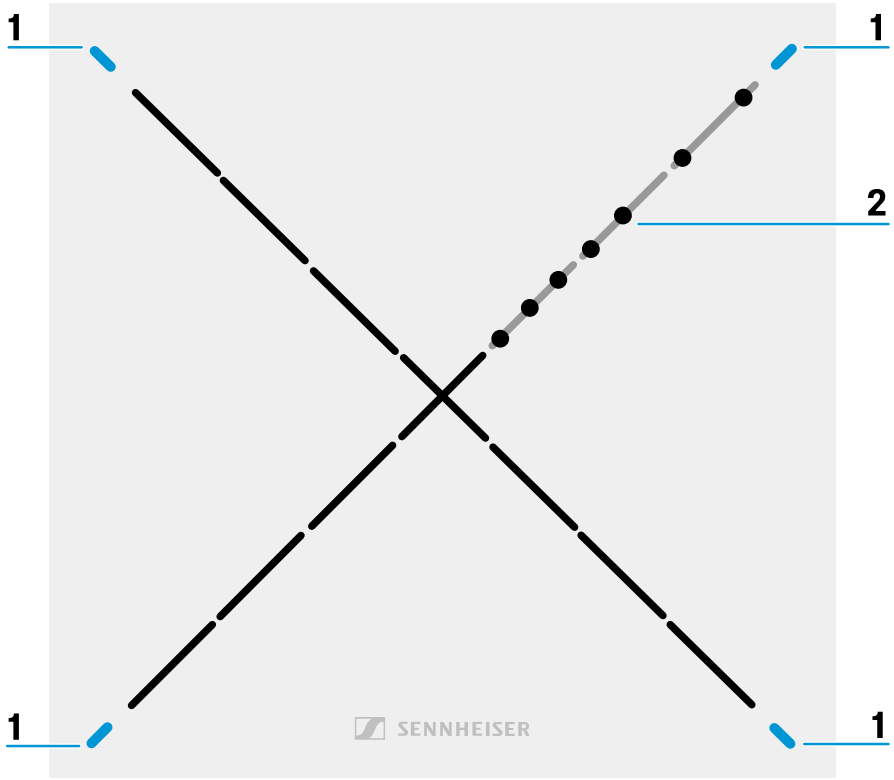

1 Status LEDs (Multi-colored, can be configured with software)

2 Microphone capsules (Twenty-eight KE 10-237)

Bottom

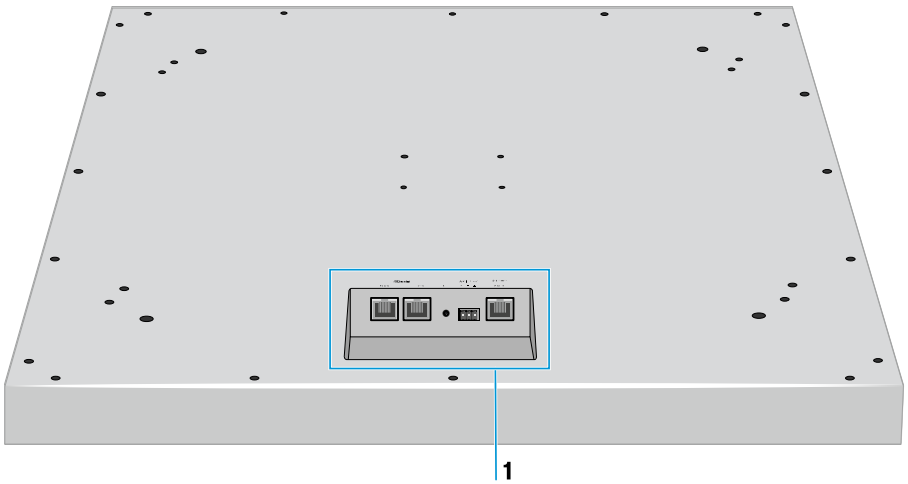

1 Connection sockets (See Connectors and controls)

Connectors and controls

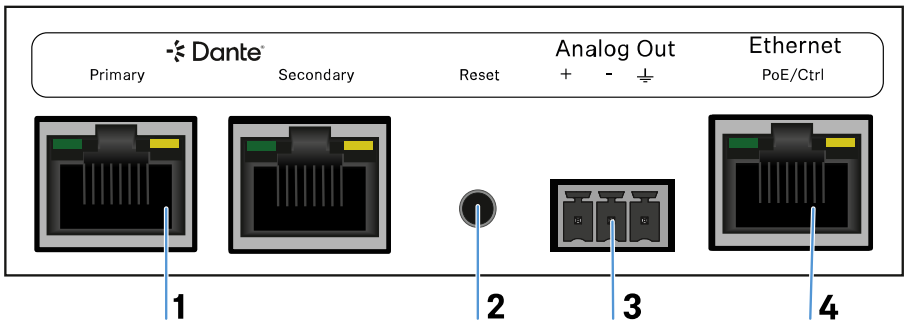

1 **Digital audio output**

- Dante® interface with two RJ-45 sockets, Primary and Secondary
- Supports redundancy and switched mode
- See Outputting digital audio signals

2 **Reset button**

- To reset to factory settings, hold down for 5 seconds

3 **Analog audio output**

- 3-pin socket
- Suitable for Phoenix Contact MCVW 1.5-3-ST-3.81
- See Outputting analog audio signals

4 **PoE/Ctrl socket**

- RJ-45 socket
- PoE supply (Power over Ethernet)
- Configuration via the software or a media control system
- See Connecting to a network

Accessories

Ceiling mounting frame

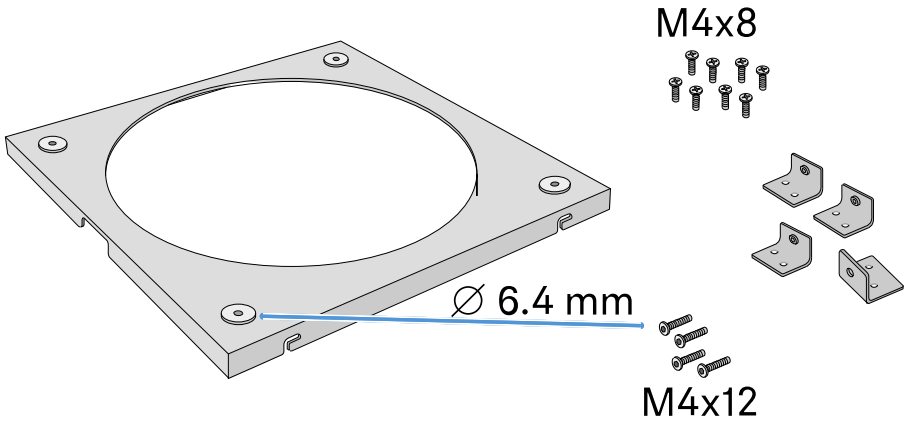

SL CM FB | Ceiling mounting frame | Art. no. 506846

Angle brackets

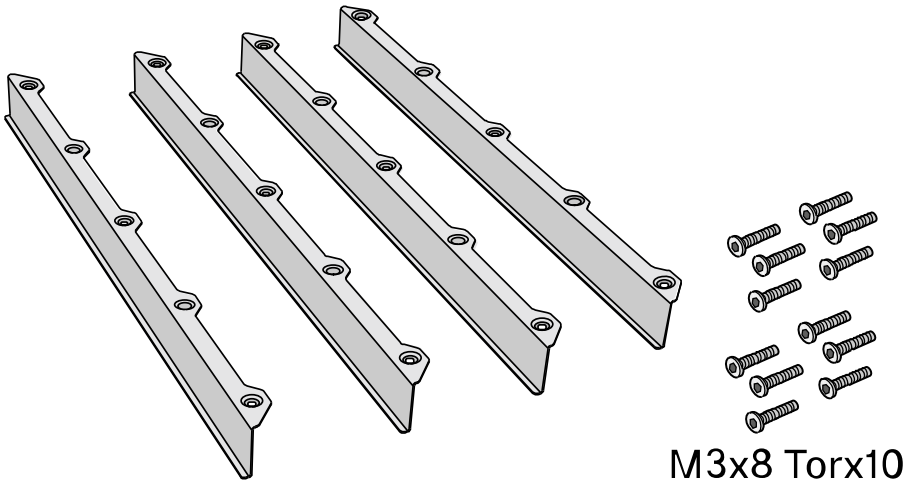

SL CM EB US | For 2 ft ceiling grid | Art. no. 508528

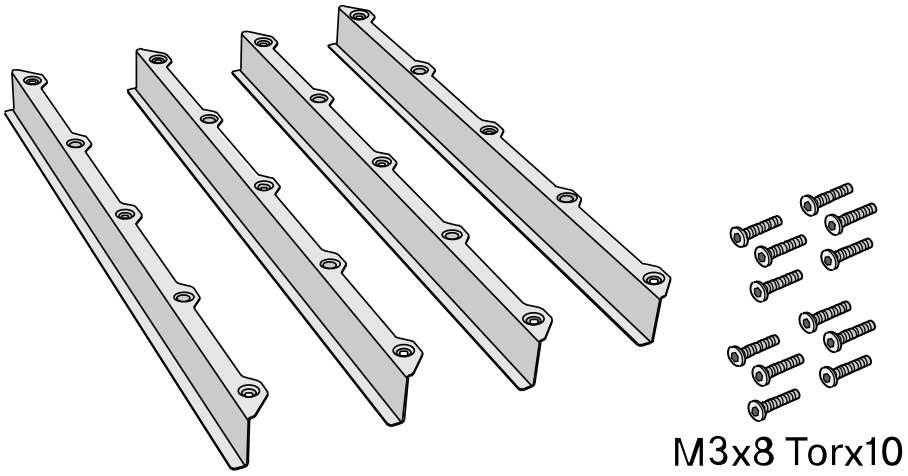

SL CM EB 625 | For 625 mm ceiling grid | Art. no. 508290

Ceiling suspension kit

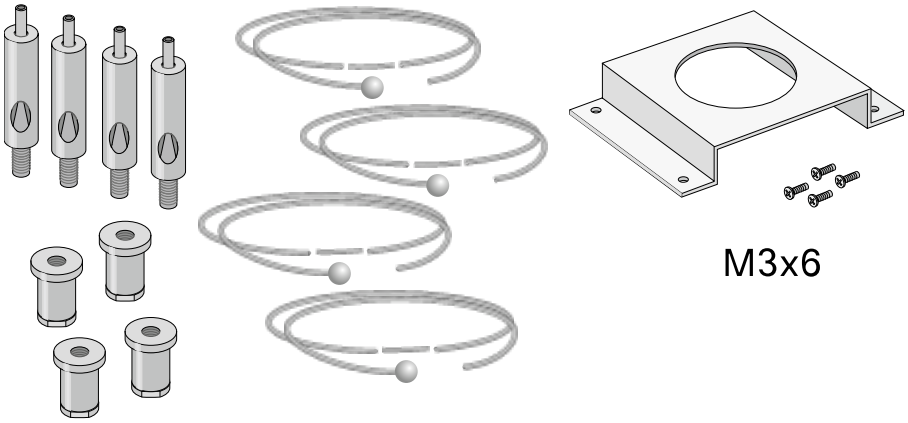

SL CM SK | Ceiling suspension kit | Art. no. 508291

VESA adapter

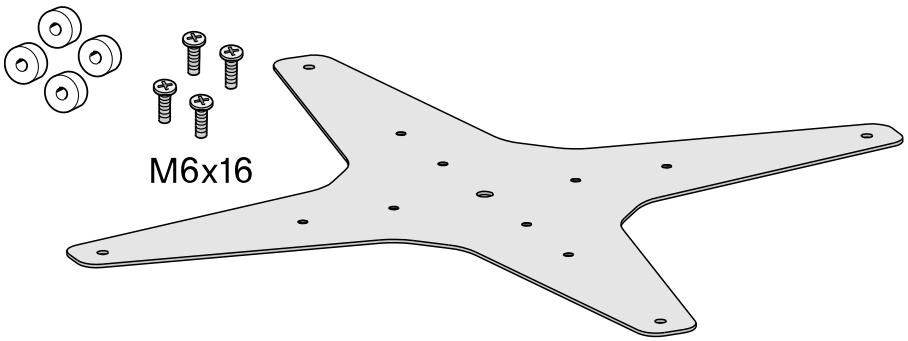

SL CM VB | VESA adapter | Art. no. 508620

3. Planning and installation

Information about connecting to a network, audio output and installation planning.

Connecting to a network

Outputting analog audio signals

Outputting digital audio signals

Planning the installation

Connecting to a network

The Ethernet PoE/Ctrl RJ-45 socket is used to both power the TeamConnect Ceiling 2 via Power over Ethernet and configure it using the Sennheiser Control Cockpit software (see Configuring the TeamConnect Ceiling 2 with the Sennheiser Control Cockpit).

In your network you can either use a switch that provides PoE or a PoE injector.

> **i** Use only shielded STP network cables that do not exceed an AWG value of 24.

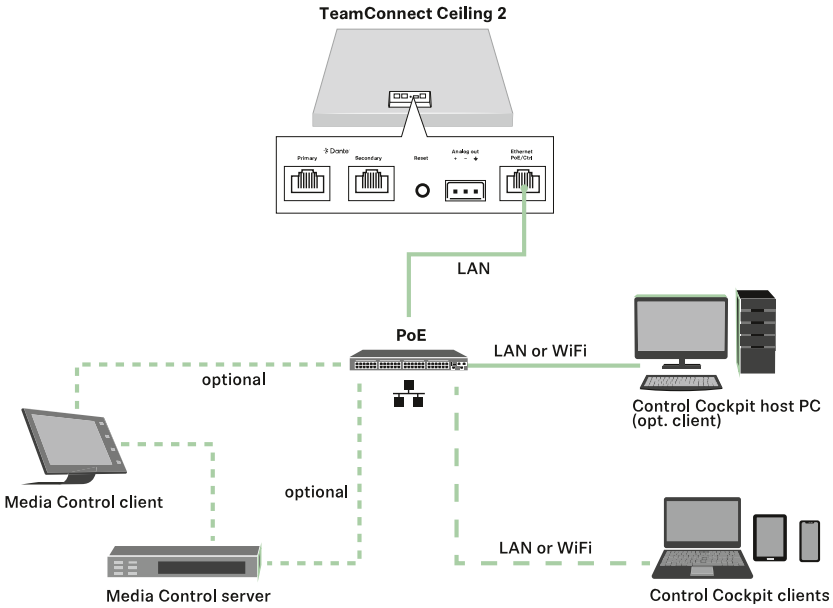

Outputting analog audio signals

Use the Analog Out socket to output analog audio signals.

> **i** The analog audio cable is not included with delivery. Depending on the audio input of your DSP, the cable must connect 3-pin terminal to 3-pin XLR terminal or to jack.

Variant 1: output analog audio signal to a DSP

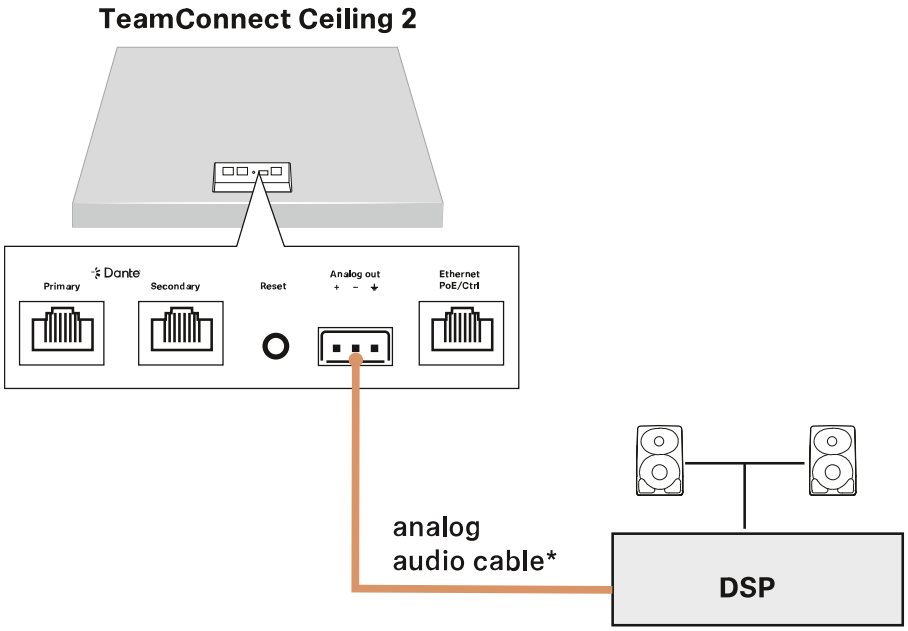

Variant 2: output analog audio signal to video conference codec

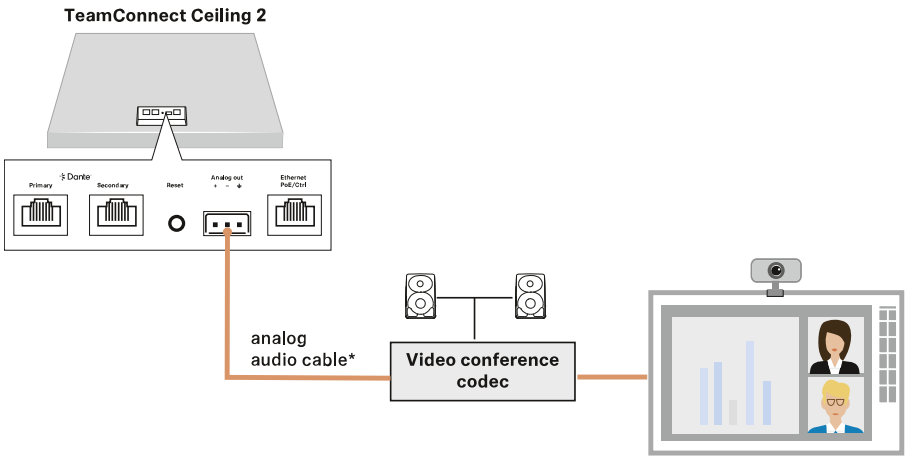

Variant 3: output analog audio signal from multiple ceiling microphones to a single DSP

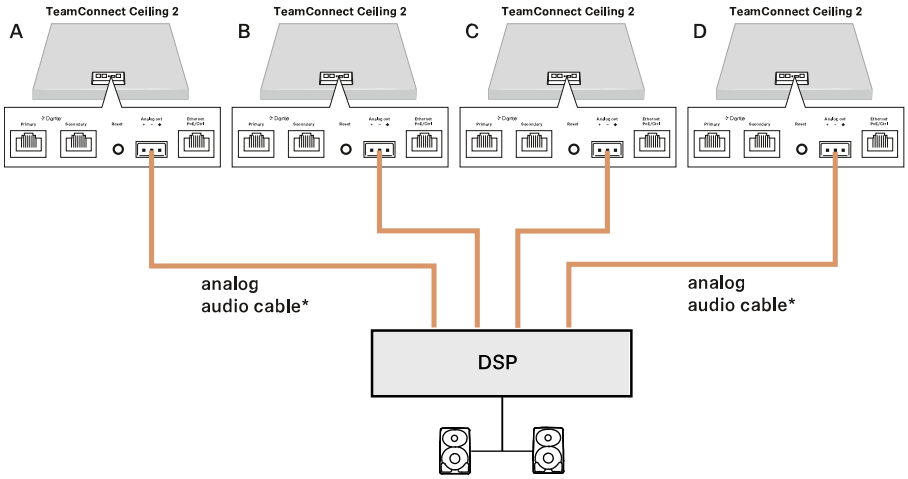

Outputting digital audio signals

The Dante® interface with two RJ-45 sockets, Primary and Secondary, is used for outputting digital audio signals. The interface supports redundant output and series connection of multiple ceiling microphones (switched mode). The mode is configured using the Dante Domain Manager or Dante Controller from Audinate (audinate.com).

Variant 1: output digital audio signal to one Dante® network

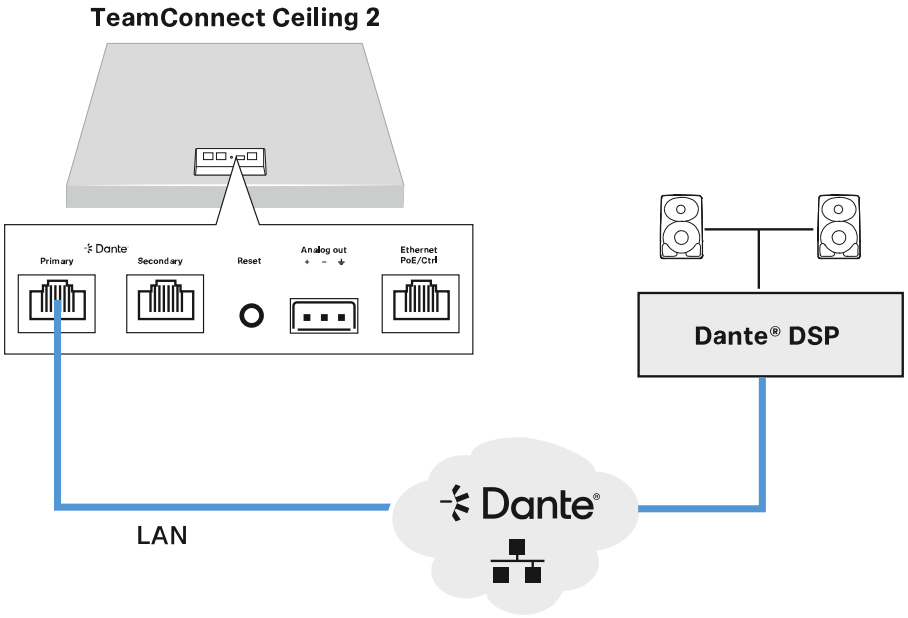

Variant 2: output digital audio signal redundantly to two separate Dante® networks

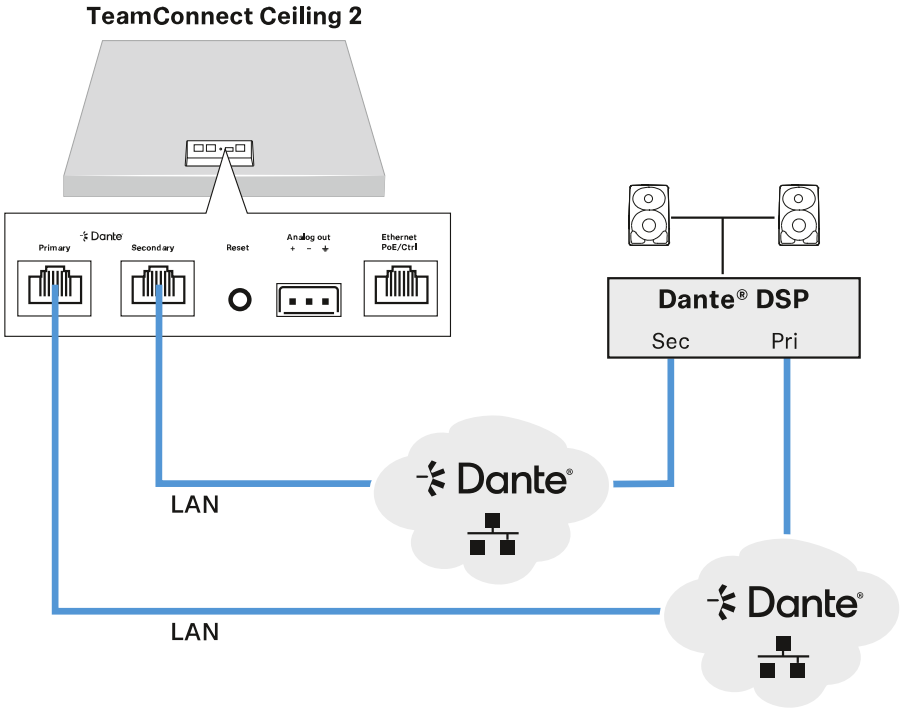

Variant 3: output digital audio signals from multiple ceiling microphones connected in series to one Dante® network

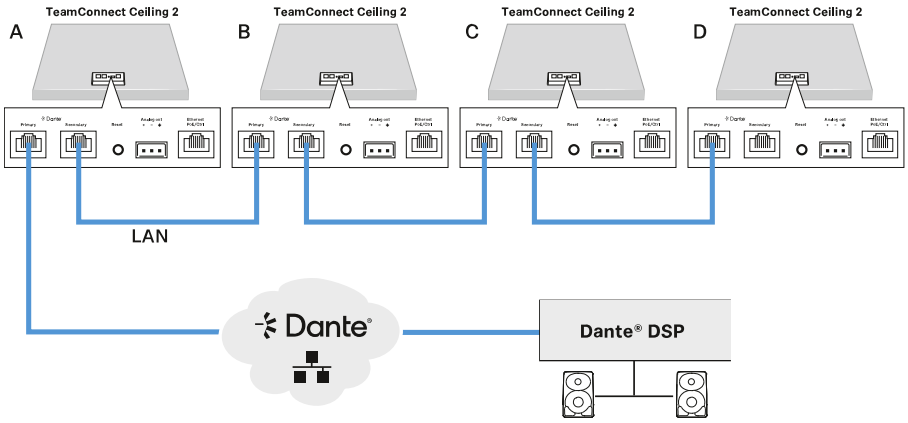

Planning the installation

> Detailed installation instructions can be found in the section Installation and startup.

Possible installation variants

Variant 1: installed flush in a dropped/coffered ceiling



Accessories required:

- Angle brackets
  - SL CM EB US (590 mm to 2 ft) or
  - SL CM EB 625 (590 mm to 625 mm)

Variant 2: mounted directly below the ceiling



Accessories required:

- Ceiling mounting frame
  - SL CM FB

Variant 3: suspended from the ceiling



Accessories required:

- Ceiling suspension kit
  - SL CM SK

Adapting the installation height

i Observe the following minimum and maximum distances when installing the TeamConnect Ceiling.
The recommended maximum distance from the speaker to the TeamConnect Ceiling 2 is 4 to 5 m.

The minimum distance from the TeamConnect Ceiling 2 to the floor is 2.50 m.

i If installation variants 1 or 2 would result in a distance greater than the recommended maximum due to the room height, we recommend installation variant 3.

Recommended distances for variants 1 and 2:

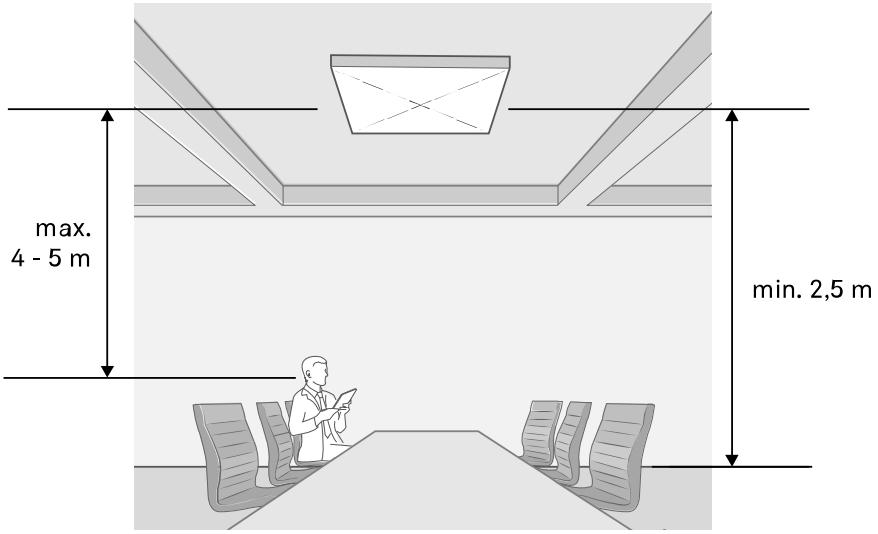

Recommended distances for variant 3:

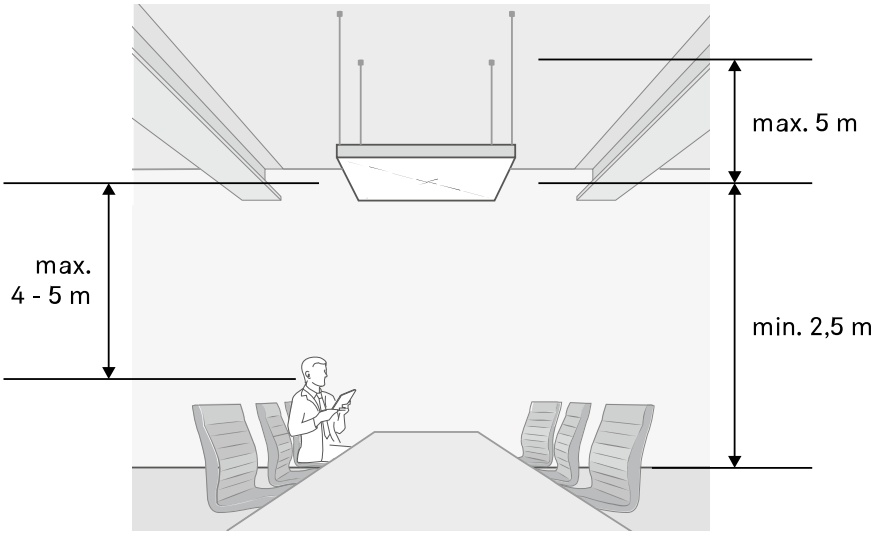

4. Installation and startup

Instructional chapters on mounting and configuring the device.

Variant 1: installed flush in a dropped/coffered ceiling

Variant 2: directly below the ceiling

Variant 3: suspended from the ceiling

Mounting the TeamConnect Ceiling 2 on a VESA mount

Configuring the TeamConnect Ceiling 2 with the Sennheiser Control Cockpit

Configuring the TeamConnect Ceiling 2 with a media control system

Variant 1: installed flush in a dropped/coffered ceiling

The TeamConnect Ceiling 2 can be easily installed in a dropped ceiling or coffered ceiling with square ceiling tiles (600 x 600 mm). Angle brackets are available for ceiling tiles with the standard dimensions of 2 ft or 625 mm.

When flush mounting, do not install the TeamConnect Ceiling 2 directly next to lights or other electrical devices in the ceiling.

WARNING



Danger of injury and damage to property if the product should fall

If mounted incorrectly, the product may fall.

- When mounting on the ceiling, always secure the product against falling.

A: secured with SL CM SK suspension kit

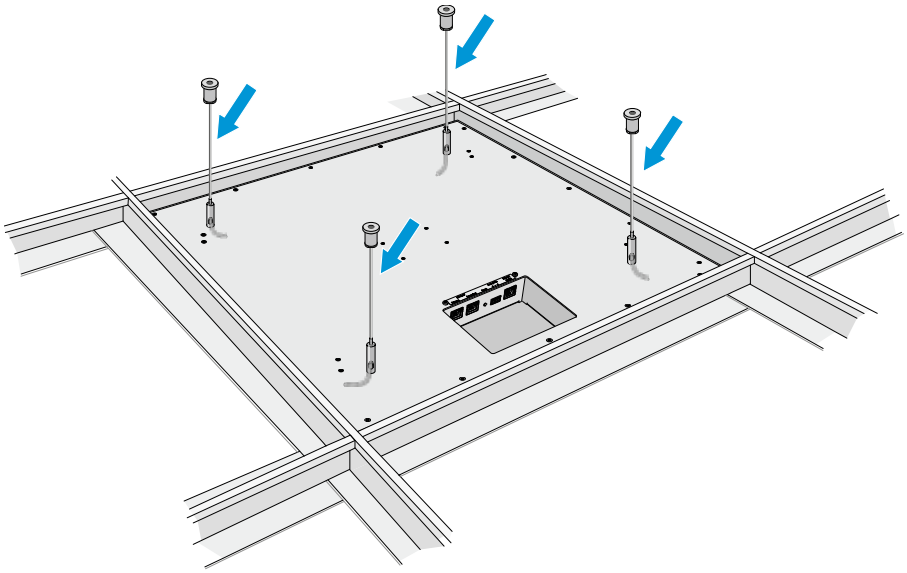

B: secured with eye bolts

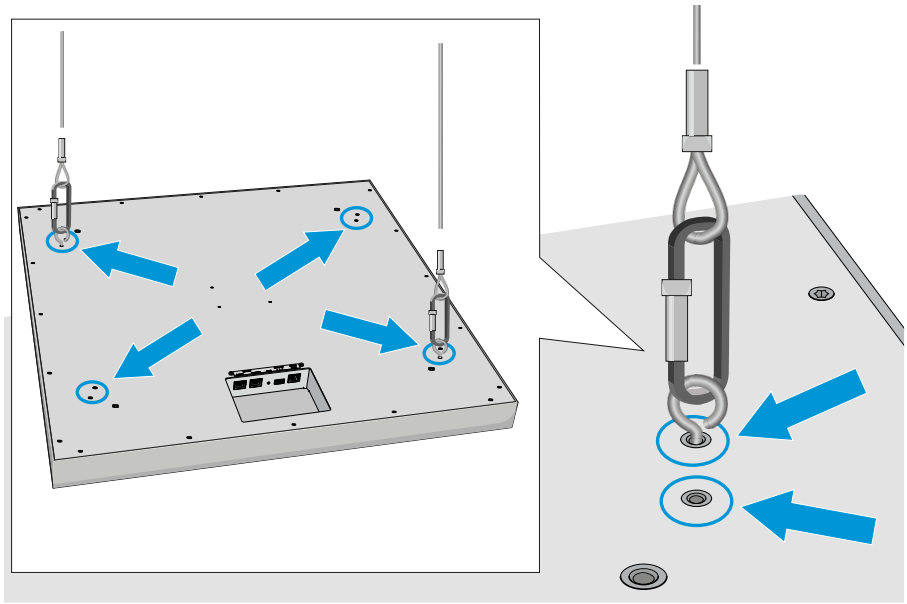

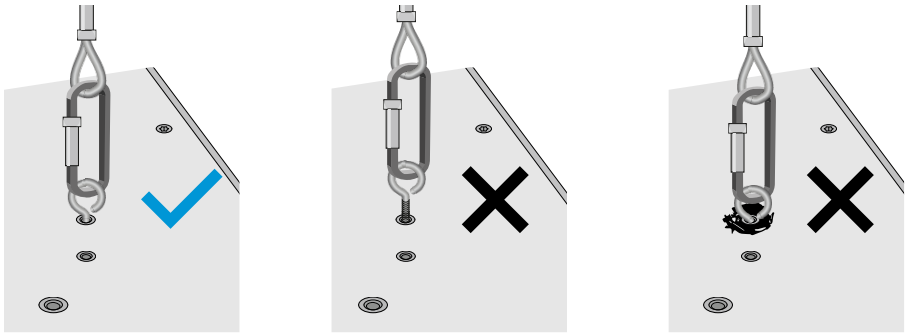

- Hand-tighten the M4x10 eye bolts in the TeamConnect Ceiling 2 to avoid damaging the metal housing by screwing them in too deeply.
- Make sure that the thread on the eye bolt is fully within the thread at the mounting point.

Recommended cabling

Observe the following when connecting and running the cables:

- Always run the cables carefully and in a loop shape inside the installation recess.
- Make sure not to kink the cables to avoid breaking them or damaging the plugs.

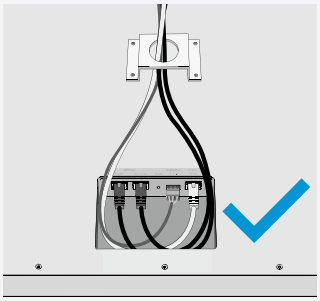

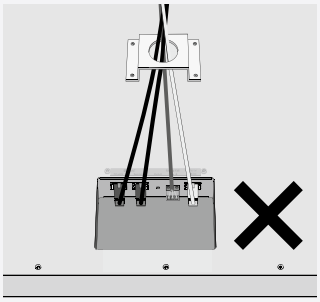

Recommended paint protection measures

Protect the surface of your TeamConnect Ceiling 2 against scratches or damage to the paint by using the clear rubber feet included with delivery.

- On the underside of the TeamConnect Ceiling 2, clean the areas where you want to attach the feet.
- Attach the feet to the product.

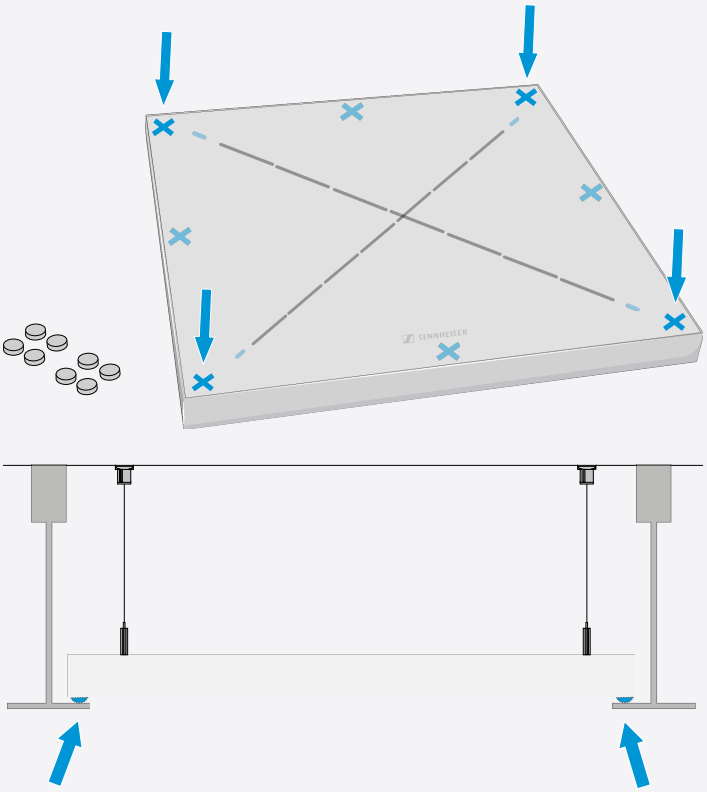

Installing the TeamConnect Ceiling 2 without mounting bracket in the ceiling (600x600 mm grid):

- Remove a tile from the ceiling.
- Place the TeamConnect Ceiling 2 in the frame in the coffered ceiling.

- Maintain the distances indicated in the figure.

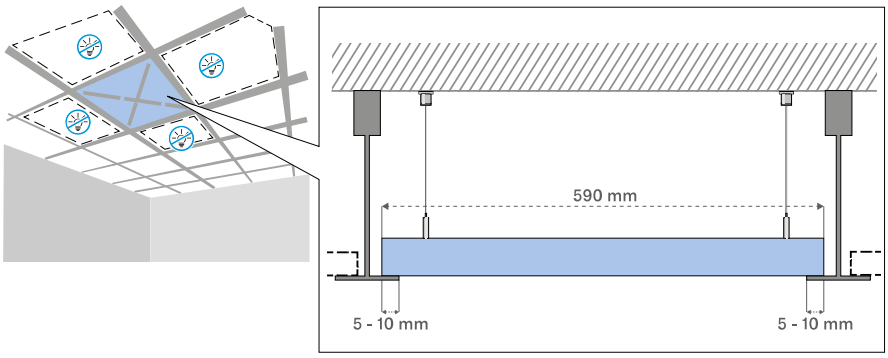

Installing the TeamConnect Ceiling 2 with mounting brackets in the ceiling (2x2 ft or 625x625 mm grid):

- Attach the mounting brackets to the TeamConnect Ceiling 2 as shown in the figure.

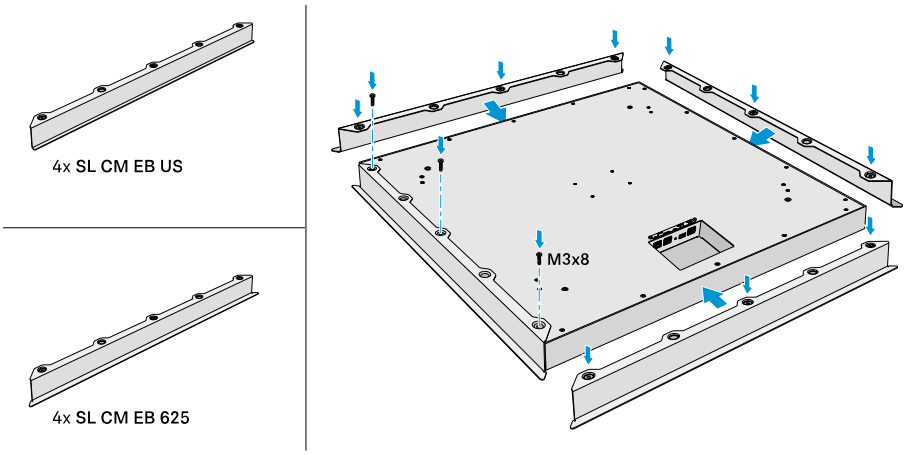

- Remove a tile from the ceiling.
- Place the TeamConnect Ceiling 2 in the frame in the coffered ceiling.
- Maintain the distances indicated in the figures.
- **Mounting with SL CM EB US:**

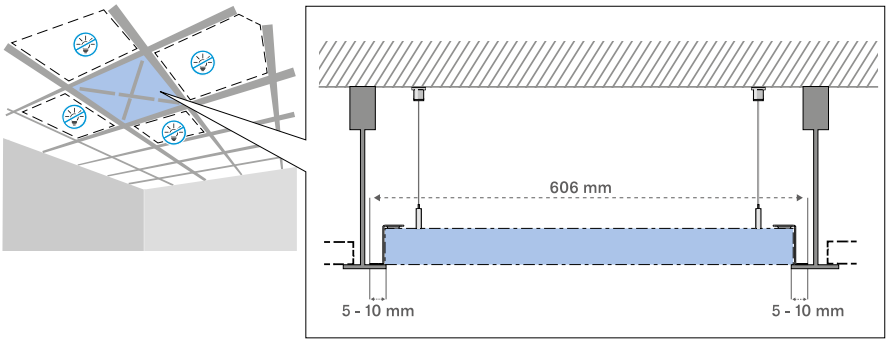

- **Mounting with SL CM EB 625:**

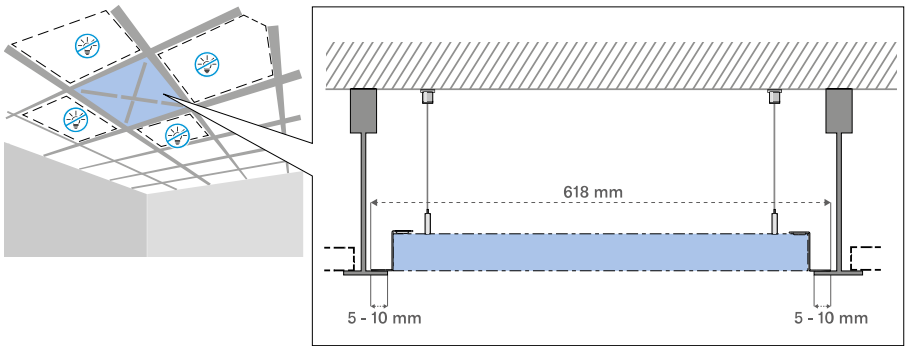

✓ The Team Connect Ceiling 2 is now mounted flush with the ceiling.

Variant 2: directly below the ceiling

To mount the product directly below the ceiling, you need the SL CM FB ceiling mounting frame.

> **i** Screws and anchors for mounting the product to the ceiling are not included with delivery. Use screws and anchors that are appropriate for the particular characteristics of your ceiling.

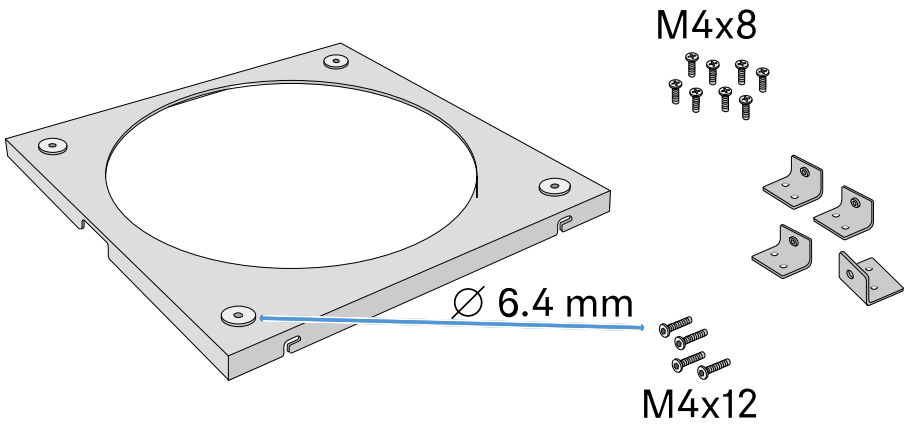

Mounting the ceiling mounting frame

- Screw the ceiling mounting frame to the ceiling using four suitable screws and anchors.

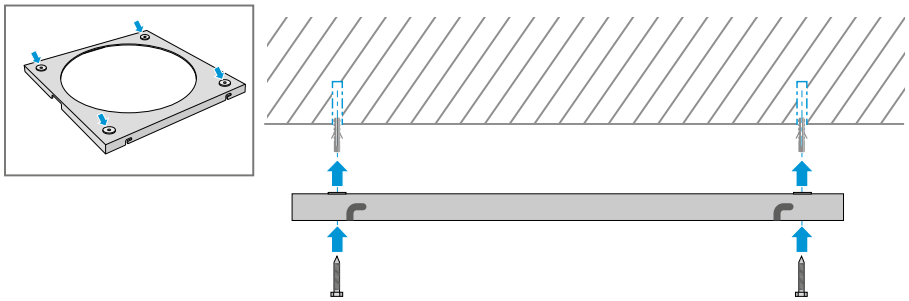

Fastening the mounting brackets to the TeamConnect Ceiling 2

- As shown in the figure, fasten the four mounting brackets to the TeamConnect Ceiling 2 using two of the included M4x8 screws for each bracket.
- Screw one M4x12 screw into each of the four angle brackets from the side.

- Do not screw the screw all the way in (see figure).

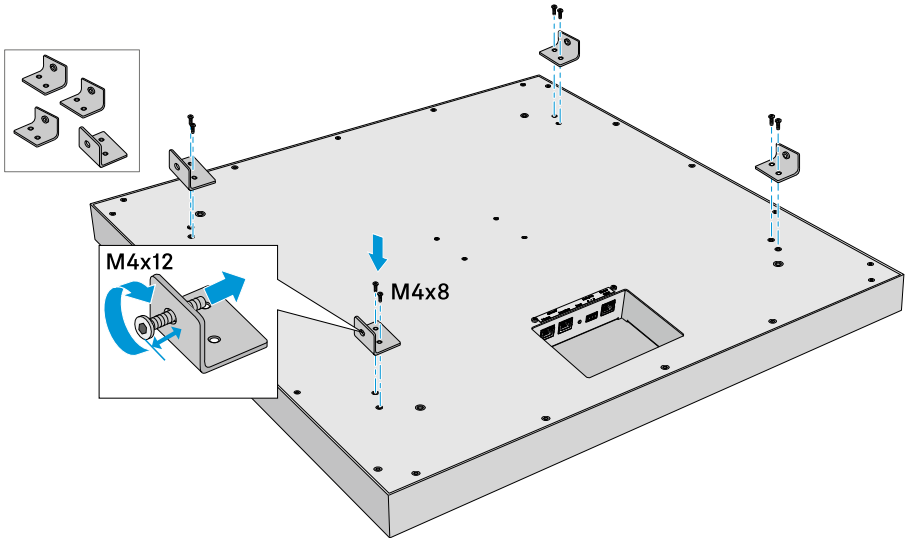

Fastening the TeamConnect Ceiling 2 to the ceiling mounting frame

- As shown in the figure, hook the TeamConnect Ceiling 2 into the grooves in the ceiling mounting frame using the four M4x12 screws installed in the previous step.
- Tighten the four M4x12 screws so that the TeamConnect Ceiling 2 sits tightly in the ceiling mounting frame.

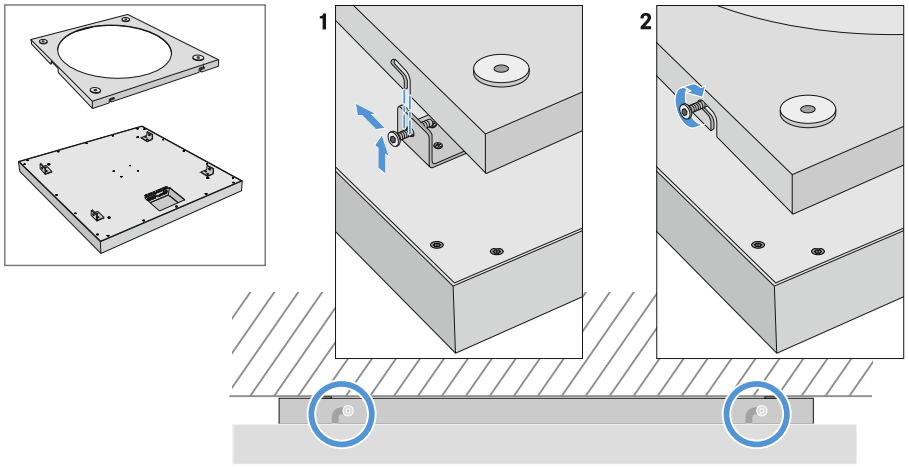

✓ The TeamConnect Ceiling 2 is now mounted under the ceiling.

Variant 3: suspended from the ceiling

For suspended mounting, you need the SL CM SK ceiling suspension set.

> **i** Screws and anchors for mounting the product to the ceiling are not included with delivery. Use screws and anchors that are appropriate for the particular characteristics of your ceiling.

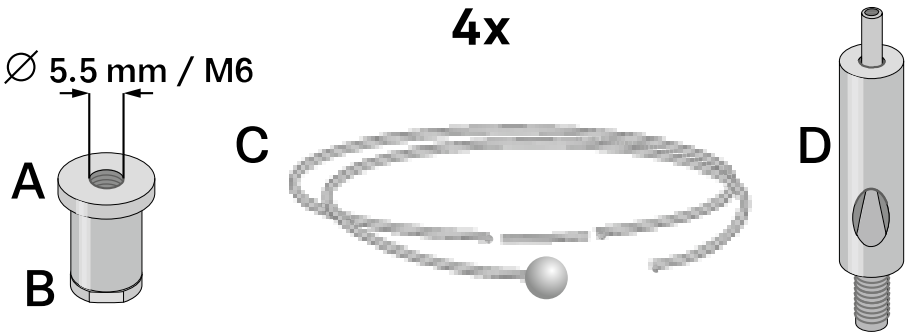

Preparing the ceiling fastener

- Unscrew part A of the ceiling fastener from part B.
- Thread the steel cable C into part B so that the ball on the steel cable is in part B.
- Repeat these steps for the other three fasteners.

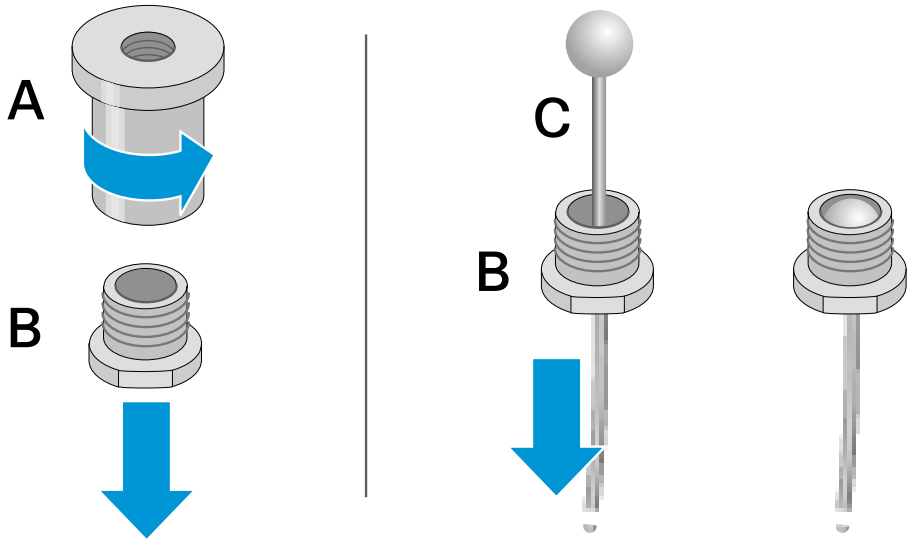

Mounting the ceiling fastener

- Attach part A of the ceiling fastener to the ceiling using a suitable anchor and screw.
- Use the included drilling template to align the drill holes.

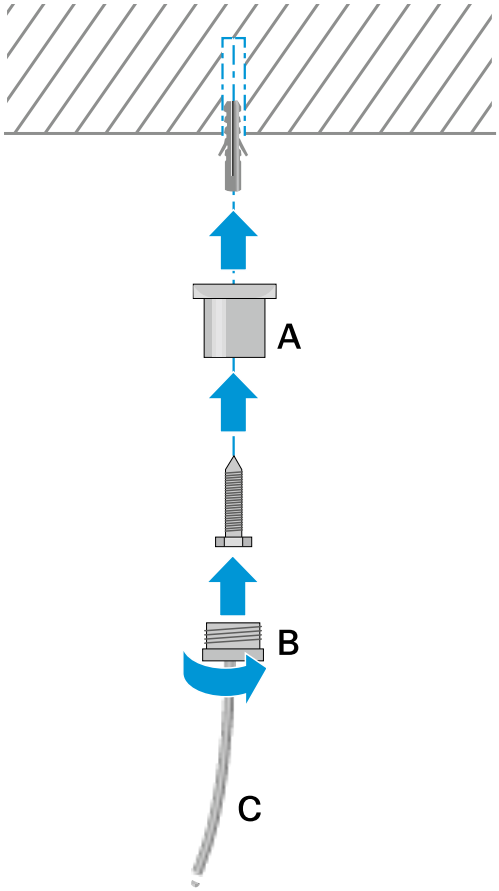

- Then screw part B of the ceiling fastener into part A.

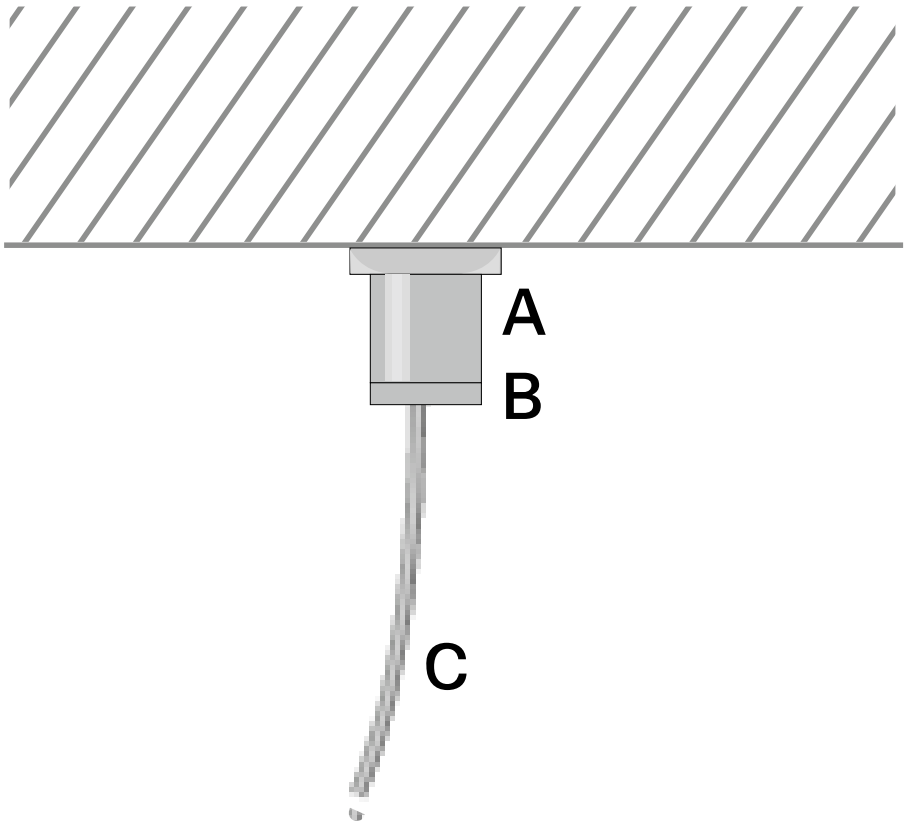

- Repeat these steps for the other three fasteners.

Mounting the product fastener

- As shown in the figure, screw the product fastener D into the threaded mounting hole on the top of the TeamConnect Ceiling 2.
- Set the steel cable C to the desired length by using your finger to press the cable guide into the product fastener D and sliding the steel cable as needed.
- Cut the excess steel cable using suitable pliers.

- Repeat these steps for the other three fasteners.

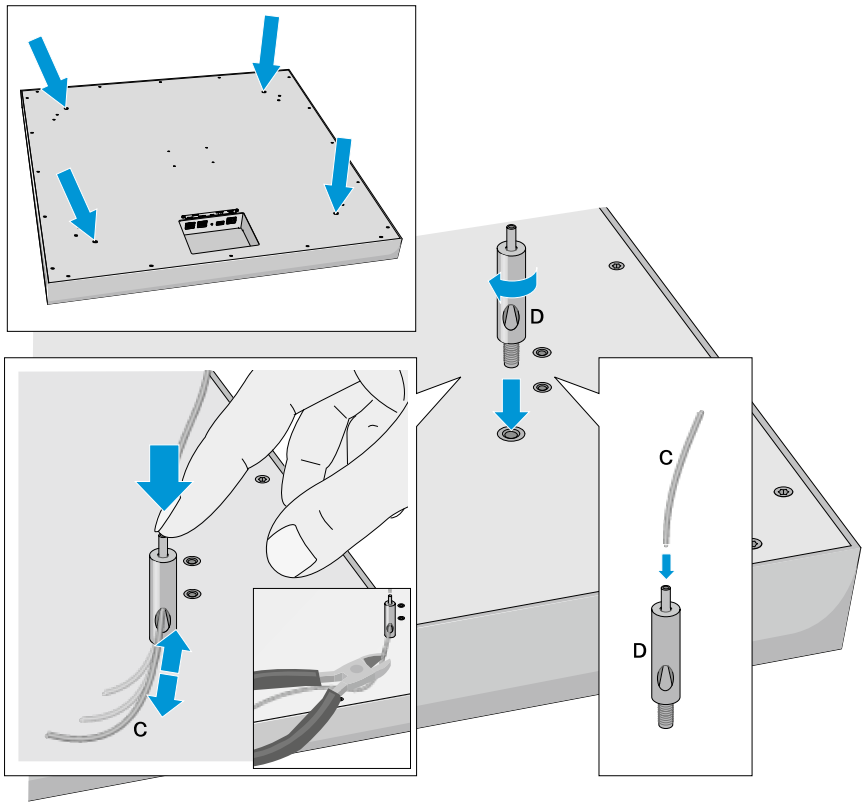

✓ The TeamConnect Ceiling 2 is now suspended from the ceiling.

Mounting the TeamConnect Ceiling 2 on a VESA mount

The TeamConnect Ceiling Medium can be mounted on standard VESA MIS D mounts.

The SL CM VB VESA adapter (available separately) allows you to mount the TeamConnect Ceiling 2 on any 100 x 100 mm or 200 x 200 mm VESA mount.

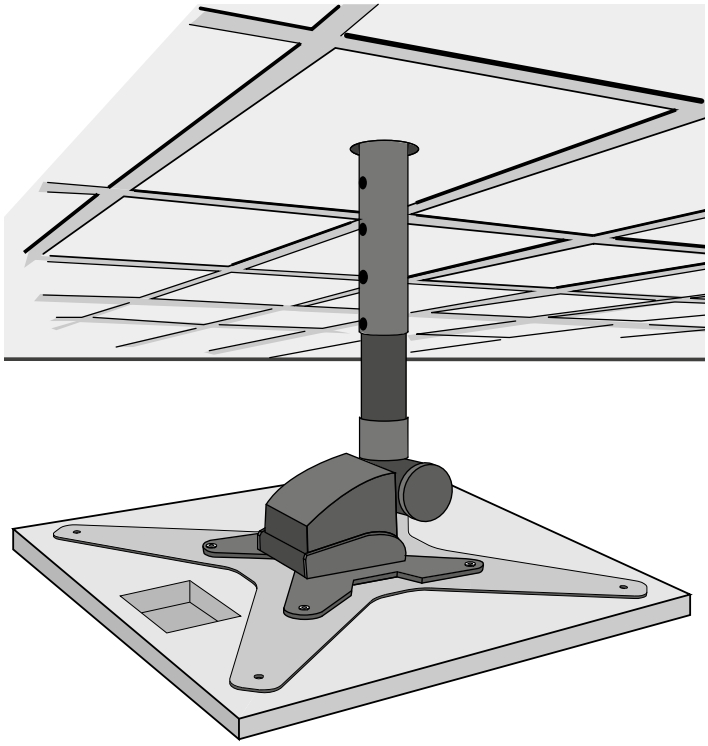

- Fasten the ceiling mount to the ceiling using suitable screws and anchors.
- Observe the mounting specifications from the manufacturer.

Proceed as follows to fasten the SL CM VB VESA adapter plate to the VESA mount:

- First fasten the SL CM VB VESA adapter plate to the VESA mount.
- Then mount the TeamConnect Ceiling 2 to the SL CM VB VESA adapter plate as shown in figure 2.

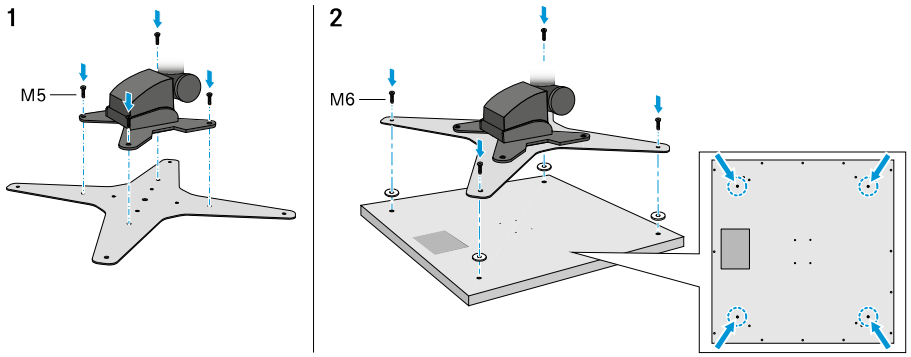

✓ The TeamConnect Ceiling 2 has been mounted on a VESA mount.

Configuring the TeamConnect Ceiling 2 with the Sennheiser Control Cockpit

Downloading Sennheiser Control Cockpit

> **i** To configure and use the TeamConnect Ceiling 2, you need the free Sennheiser Control Cockpit control software. You can download it here: sennheiser.com/control-cockpit-software

> **i** To use the Sennheiser Control Cockpit, you must complete a one-time registration with your e-mail address to receive the software activation code.

- The Sennheiser Control Cockpit must be used to configure the product for the first time. After that, the TeamConnect Ceiling 2 can also be operated using a media control system. To have access to the full range of functions, however, you should use the Sennheiser Control Cockpit.

There are two ways to operate the TeamConnect Ceiling 2 using the Sennheiser Control Cockpit:

- Variant 1: integrated in an existing network
- Variant 2: as a standalone solution with a PC and a PoE-capable network switch

Variant 1: integrating the TeamConnect Ceiling 2 in an existing network

- The Sennheiser Control Cockpit should be installed on a host PC (Windows 7 or later) that is in the same network as the TeamConnect Ceiling 2 that you want to configure. The Sennheiser Control Cockpit runs on the host PC as a Windows service. Any browser-capable device in the network (e.g. PC/Mac, tablet or smartphone) can operate the product using the Control Cockpit Client, which is accessed at a specific URL in the browser.

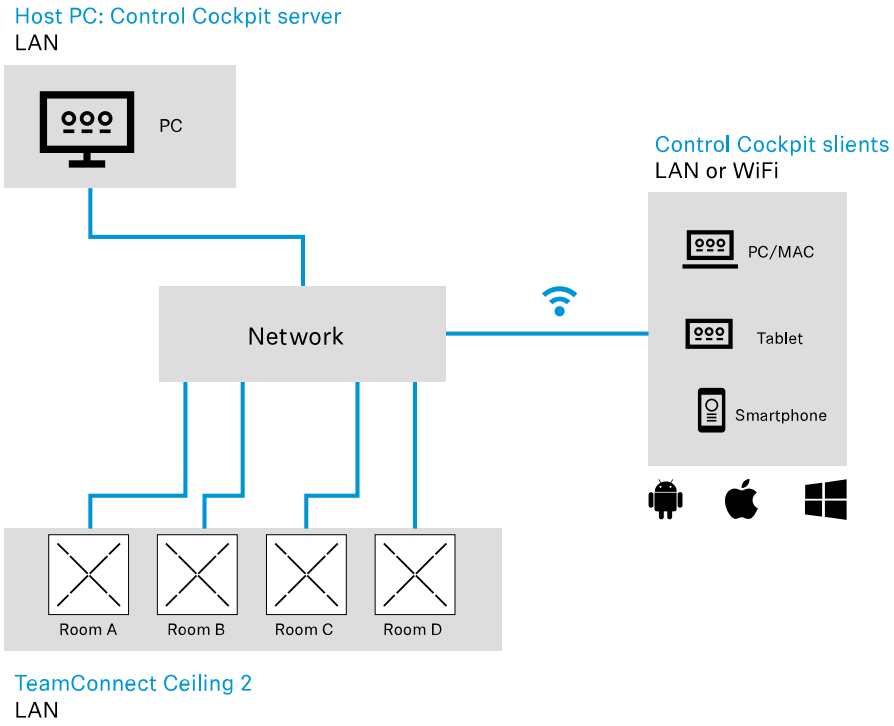

> The online help contains detailed information about the functions of the Sennheiser Control Cockpit and how to configure the TeamConnect Ceiling 2 and the network. The online help can be found on the Sennheiser Control Cockpit product page (sennheiser.com/control-cockpit-software) and in the software itself.

✓ Team Connect Ceiling 2 has been integrated.

Variant 2: configuring the TeamConnect Ceiling 2 as a standalone solution using a computer

- Proceed as follows to configure the TeamConnect Ceiling 2 without network integration using a computer: Connect the computer to a PoE-capable network switch using a network cable (Cat5e or higher). Alternatively, you can use a PoE injector.
- Connect the network switch to the Ethernet PoE/Ctrl socket on the TeamConnect Ceiling 2.

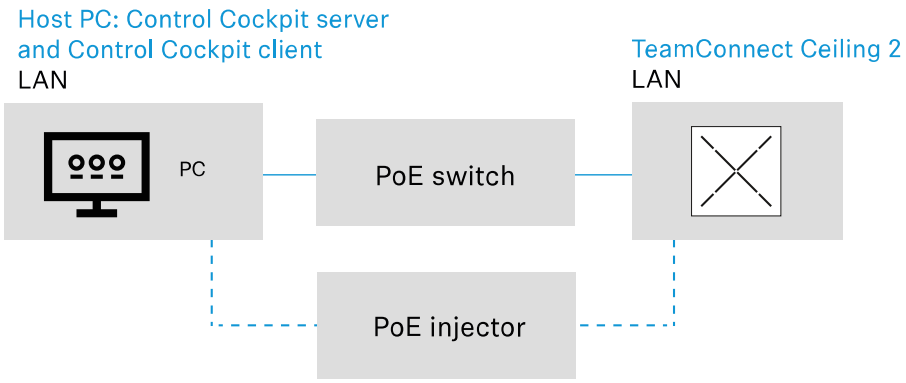

Team Connect Ceiling 2 has been integrated.

TeamConnect Ceiling 2 can now be operated.

Configuring the TeamConnect Ceiling 2 with a media control system

After initial configuration with the Sennheiser Control Cockpit, the TeamConnect Ceiling 2 can also be operated using a media control system.

A media control system allows you to use a custom user interface with the following functions:

- Control the mute function
- Edit audio parameters (adjust output level, show microphone level, set EQ)
- LED control
- Transmit speaker position

Sample application:

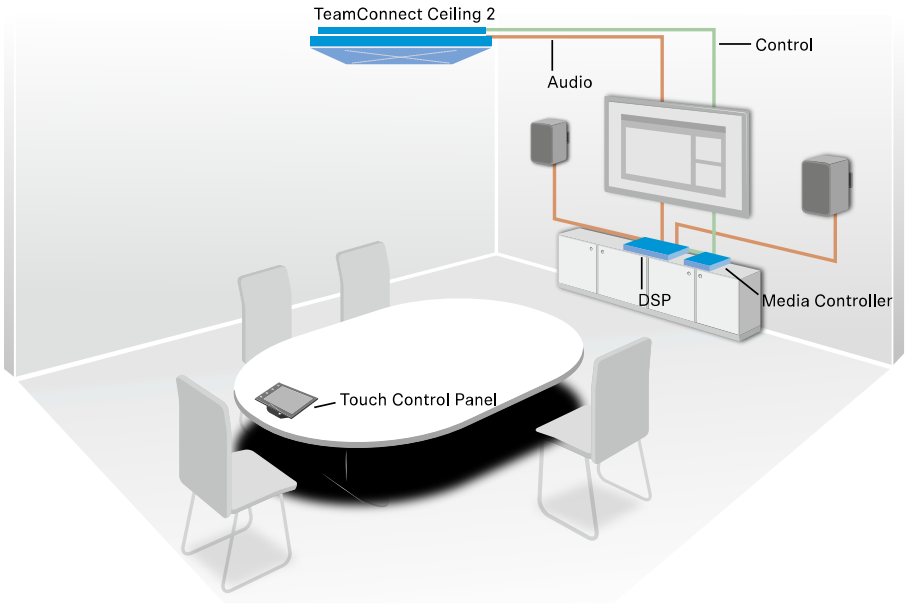

The media control protocol for TeamConnect Ceiling 2 is available for download as a PDF file on the product web page: sennheiser.com/tc-ceiling-2

5. Specifications

Product characteristics and acoustic properties, ambient conditions, polar diagram and frequency response curve.

Specifications

Speech transmission index

Cleaning and maintenance

Specifications

Product characteristics and acoustic properties, ambient conditions, polar diagram and frequency response curve

Product properties

Dimensions (LxWxH)

- 590 x 590 x 43 mm

Weight

- 6 kg

Audio outputs

- 1 × 3-pin connection socket (suitable for Phoenix Contact MCVW 1.5-3-ST-3.81)
- 2 × digital Dante network audio (RJ-45)

Network/Control

- 1 × RJ-45 Ethernet socket for PoE power supply and data/control

Supply voltage

- PoE IEEE 802.3af Class 3

Power consumption

- Max. 11 W

Plenum rating

- Tested according to UL 2043

Acoustic properties

Transducer principle

- Pre-polarized condenser microphone
- AF frequency response
- 160 Hz - 18,000 Hz

Sensitivity

- 0 dBV/Pa (988 mV/Pa)

Signal-to-noise ratio

- 83dB(A)

Latency

- 4ms

Equivalent noise level

- 11dB(A)

Number of KE 10-237 microphone capsules

- 28

Pick-up pattern

- Beam pattern

Max. sound pressure level

- 104 dB SPL

Dynamic range

- 93dB(A)

Ambient conditions

Temperature range

- Operation: 0 to 40 °C (32 °F to 122 °F)
- Storage: -10 to 60 °C (32 °F to 122 °F)

Relative humidity

- 20 – 95 %, non-condensing

Polar diagram

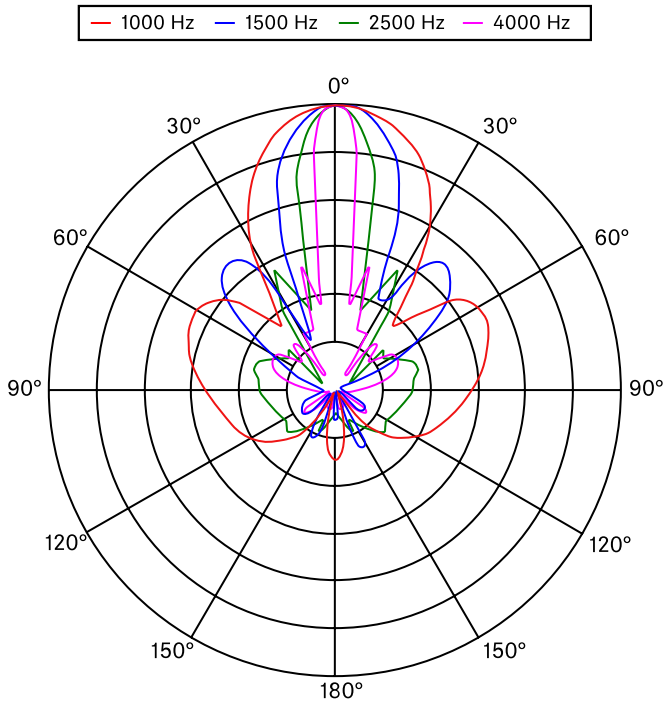

Frequency response

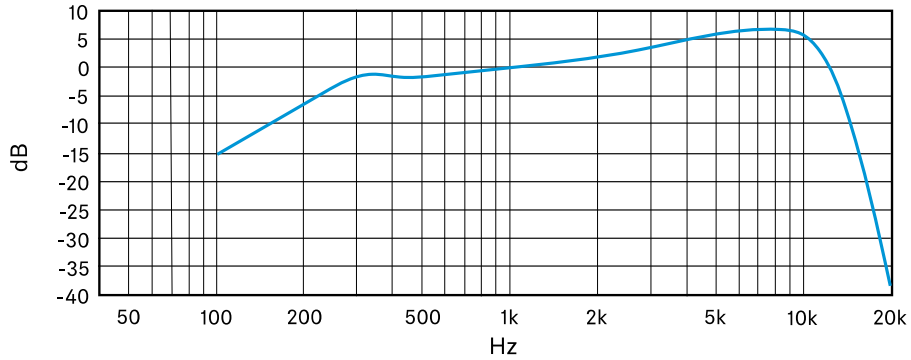

Speech transmission index

STI = speech transmission index

Room conditions: RT60 = 430 ms @ 1 kHz at room noise level (rated) = 40 dB(A) SPL (in accordance with IEC 60268-16) STIPA: 0.79

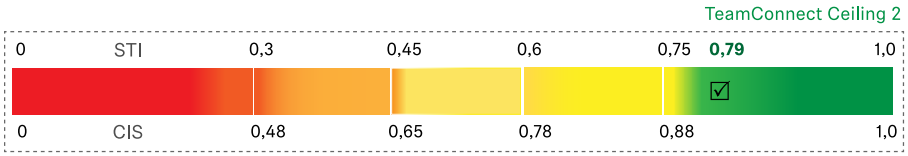

Cleaning and maintenance

Cleaning and maintenance information

NOTICE



Liquids can damage the electronics of the product

Liquids entering the product housing can cause a short-circuit and damage the electronics.

- Keep all liquids away from the products.
- Do not use any solvents or cleansing agents.
- Disconnect the mains-operated products from the power supply system and remove rechargeable batteries and batteries (if present) before you begin cleaning.
- Clean all products only with a soft, dry cloth.

6. Regulatory information

Information on manufacturer declarations, environmental and disposal notices, and terms of use.

Model: SL Ceiling Mic 2

Warranty

Sennheiser electronic SE & Co. KG gives a warranty of 24 months on these products.

For the current warranty conditions, please visit our website at sennheiser.com or contact your Sennheiser partner.

In the US please contact:

Sennheiser Electronic Corporation

1 Enterprise Drive, Old Lyme, CT 06371

www.sennheiser.com

Warranty for Australia and New Zealand only

Sennheiser Australia Pty Ltd provides a warranty of 24 months on these products. For the current warranty conditions, visit Sennheiser website: Australia: sennheiser.com, New Zealand: sennheiser.com

Sennheiser goods come with guarantees that cannot be excluded under Australian and New Zealand Consumer law. You are entitled to a replacement or refund for a major failure and compensation for any other reasonably foreseeable loss or damage. You are also entitled to have the goods repaired or replaced if the goods fail to be of acceptable quality and the failure does not amount to a major failure.

This warranty is in addition to other rights or remedies under law. Nothing in this warranty excludes, limits or modifies any remedy available to be consumer which is granted by law.

To make a claim under this contract, raise a case via Sennheiser website. Australia: sennheiser.com/support, New Zealand: sennheiser.com/support

All expenses of claiming the warranty will be borne by the person making the claim.

Sennheiser international warranty is provided by: Sennheiser Australia Pty Ltd (ABN 68 165 388 312) Level 14, Tower A Zenith Building, 821 Pacific Highway, Chatswood NSW 2067, Australia

Europe

CE

In compliance with the following requirements

- Regulation (EU) 2023/988 on general product safety
- WEEE Directive (2012/19/EU)



Italy:

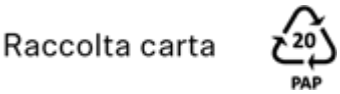

France:

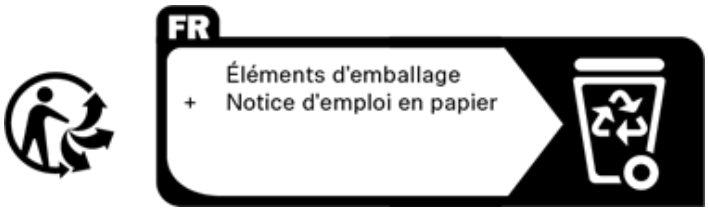

Notes on disposal

The symbol of the crossed-out dumpster on the product, the (rechargeable) battery (if applicable) and/or the packaging indicates that these products must not be disposed of with normal household waste, but must be disposed of separately at the end of their service life. For the packaging, follow the regulations in your country for separating waste. Improper disposal of packaging materials can be harmful to your health and the environment.

The separate collection of waste electrical and electronic equipment, (rechargeable) batteries (if applicable) and packaging is intended to promote reuse and recycling and to prevent negative impacts on public health and the environment, for example due to hazardous substances contained in these products. At the end of their service life, recycle electrical and electronic equipment and (rechargeable) batteries so that their materials can be reused and to prevent environmental pollution.

If (rechargeable) batteries can be removed without destroying them, you are obliged to dispose of them separately (see the product's operating instructions for information on how to remove the batteries safely). Be especially careful when handling (rechargeable) batteries containing lithium, as these pose special hazards, such as the risk of fire and/or health risks if button cells are swallowed. Reduce battery waste as much as possible by using longer-life batteries or rechargeable batteries.

Further information on the recycling of these products can be obtained from your municipal administration, from the municipal collection points, or from your Sennheiser partner. You may also be able to return electrical or electronic equipment to your distributor, if they are legally required to do so. By disposing of your batteries properly, you are helping to protect public health and the environment.

EU Declaration of conformity

- RoHS Directive (2011/65/EU)
- EMC Directive (2014/30/EU)

The full text of the EU declaration of conformity is available at the following internet address: sennheiser.com/download.

United Kingdom

In compliance with the following requirements

- WEEE Regulations (2013)



UK Declaration of conformity

- RoHS Regulations (2012)
- EMC Regulations (2016)

Importer: Sennheiser UK Ltd.

Pacific House, Third Avenue, Globe Park, Marlow

Buckinghamshire SL7 1EY, United Kingdom

USA

Statements regarding FCC and ISED

This device complies with part 15 of the FCC rules. Operation is subject to the following two conditions: (1) this device may not cause harmful interference, and (2) this device must accept any interference received, including interference that may cause undesired operation.

Contact information: Sennheiser Electronic Corporation, 1 Enterprise Drive, Old Lyme, CT 06371; sennheiser.com

UL 2043 Plenum Rated

Canada

CAN ICES-003(B) / NMB-003(B)

Australia / New Zealand



China

China RoHS

部件名称 (Parts)	有害物质										
	铅 (Pb)	汞 (Hg)	镉 (Cd)	六价铬 (Cr6+)	多溴联苯 (PBB)	多溴二苯醚 (PBDE)	邻苯二甲酸二(2-乙基己)酯 (DEHP)	邻苯二甲酸丁苄酯 (BBP)	邻苯二甲酸二丁酯 (DBP)	邻苯二甲酸二异丁酯 (DIBP)	产品环保年限 EFUP
电路模块 (Circuit Modules)	x	o	o	o	o	o	o	o	o	o	15

本表格依据 SJ/T 11364 的规定编制。

o：表示该有害物质在该部件所有均质材料中的含量均在GB/T 26572 规定的限量要求以下。

x：表示该有害物质至少在该部件的某一均质材料中的含量超出GB/T 26572 规定的限量要求。

South Korea



R-R-SE9-SLC2

Vietnam

Kể từ ngày 1 tháng 12 năm 2012, các sản phẩm được sản xuất bởi Sennheiser tuân thủ Thông tư 30/2011/TT-BCT quy định về giới hạn cho phép đối với một số chất độc hại trong các sản phẩm điện và điện tử.

Trademark

Audinate®, Dante®

Audinate® is a registered trademark of Audinate Pty Ltd. Dante® is a registered trademark of Audinate Pty Ltd.



Sennheiser electronic SE & Co. KG | Am Labor 1 | 30900 Wedemark | Germany