Media 51™

Artistry in Analogue™



AMEK

A Harman International Company

Product Overview

Media 51 -
Typical Connection Diagram
(Using 6-track Dubbers)

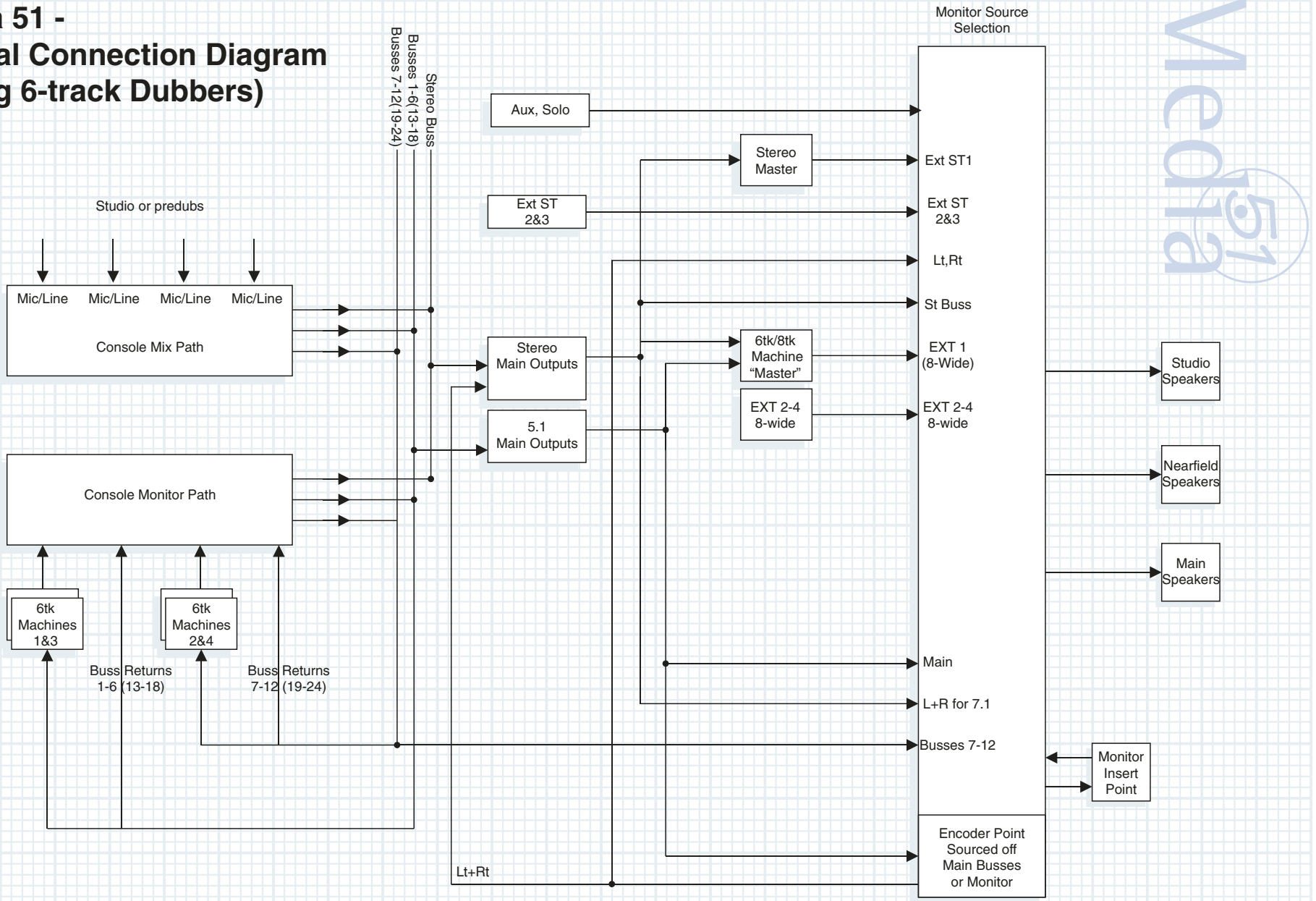

Perfectly Equipped for the Surround Sound Age.

The demand for surround formatted high quality audio material has never been greater. Film, TV, Video, DVD, DVD-A, Digital Radio and the Internet will require more and more programme material; all of which must be produced and mixed, or re-mixed, with present and future multichannel audio formats in mind.

It is for that reason that AMEK designed Media 51, a cost-effective all-analogue console solution for multi-format Music Recording, Post-Production and Broadcast environments. Multi-format bussing and true multi-format monitoring, including a fold-down matrix, supports current and envisaged cinema and multi-channel broadcast formats including Dolby Digital, Dolby Surround, DTS and Sony SDDS.

Media 51 uses AMEK's traditional in-line mixing surface design to provide instant familiarity of operation, whilst providing a feature set up to now unavailable on a console of this quality in this price range.

Media 51 comes equipped as standard with AMEK's Supertrue™ Automation which provides comprehensive fader and switch automation,

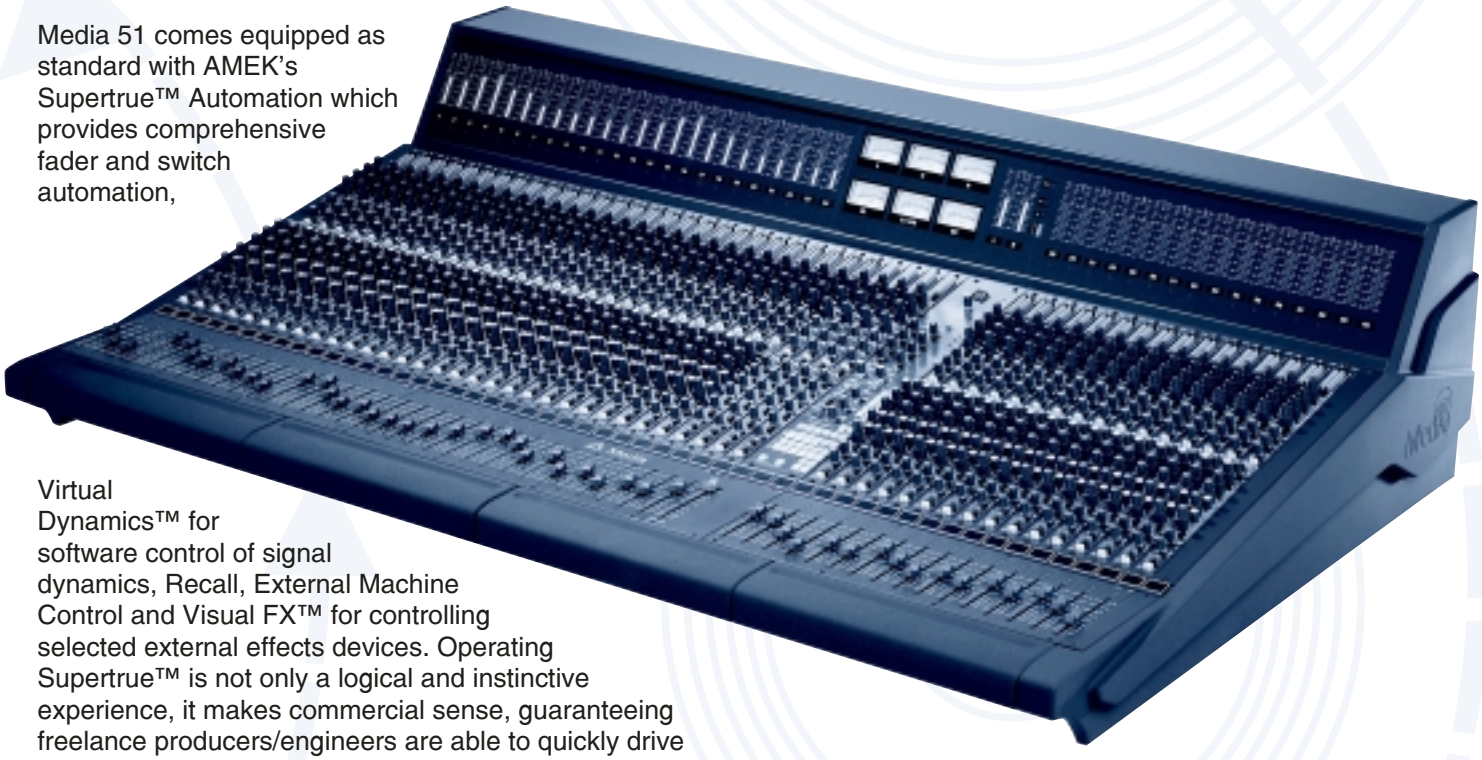

Virtual Dynamics™ for software control of signal dynamics, Recall, External Machine Control and Visual FX™ for controlling selected external effects devices. Operating Supertrue™ is not only a logical and instinctive experience, it makes commercial sense, guaranteeing freelance producers/engineers are able to quickly drive the automation system and ensuring you don't have to compromise on functionality.

But what of the sound?

AMEK's mastery of analogue circuitry is second to none. An audio path of exceptionally high quality is provided via an Equaliser and Mic Pre designed by the legendary Mr. Rupert Neve. This means you benefit from over half a century of audio artistry courtesy of the man himself, providing you with a warm musical sound like no other.

At AMEK we have thought long and hard about your requirements for multiformat audio…

Experience the true value and exquisite sonic performance of a first-class surround solution by auditioning Media 51 today.

- **EQ & Mic Pre by Mr. Rupert Neve**
- **Multiformat mixing up to 5.1**
- **Monitoring for up to 4 external stem mixes (individually and/or additive)**
- **Supertrue™ fader and switch automation**
- **Virtual Dynamics**
- **Recall**
- **Visual FX™**
- **Optional Joystick Panel**

Media 51

Media 51 - Operation

Overview

Media 51 builds on Amek's well established in-line control surface designs with new Mono Channels, Stereo Returns and Master Module.

Bussing and monitoring up to 8 channels wide including Dolby Surround/Pro Logic (LCRS), Dolby Digital, DTS (5.1), Dolby Surround EX, DTS-ES (6.1), SDDS, IMAX/Iwerks (7.1), in addition to stereo and mono. Each mono input module can pan up to 5.1. The optional joystick provides panning up to full 7.1 format.

The M1RN mono input channel includes new mic amp and EQ stages by Mr. Rupert Neve. True to his tradition, Mr. Neve makes no compromise in his choice of components. The mic amp is as transparent as they come with a very high specification and extremely precise control of gain settings. Mr. Rupert Neve's EQ is world renowned for its fat, punchy low end, clean transparent highs and accurate, detailed midrange.

Every Media 51 also includes four M2 Stereo Return modules controlling four stereo line inputs and four stereo effects returns.

Master control is via the M3 Master Module, which offers comprehensive surround monitoring facilities, including multiple solo, cut and metering modes, easy insertion of encode and decode processors, extensive downmixing and stem monitoring capabilities, master Playback/Direct (PEC/Direct) switching, and comprehensive speaker control.

Equipped as standard is AMEK's Supertrue™ v3.7 fader, switch, and event automation, with synchronisation through SMPTE and MIDI, plus Virtual Dynamics™ and recall of all mono and stereo input channel parameters. A cue list function allows the triggering of internal and external events against timecode with quarter-frame accuracy.

Media 51 can be optionally supplied with a motorised joystick, offering a full range of panning modes up to 7.1. Other options include a floorstand and a frame extension to accommodate a jackbay.

Channel Multitrack Assignment

Channels are assigned to one or more of the 12 available busses via discrete buss switches at the top of each channel module and also to the entirely independent stereo buss.

Busses 1 to 6 are intended to be used as up to a 6-wide multi-format mix buss (stem), as inserts are available to connect to an encoder/decoder. Busses 7-12 are standard mix busses. A separate stereo buss is also available.

The normal pan mode across any two pairs of multitrack busses is stereo; that is, panning to Left will send full level to busses 1, 3, 5, 7, 9 and 11, panning right to busses 2, 4, 6, 8, 10 and 12. If the LCRS switch is pressed, then the pan mode for that channel becomes LCR: panning fully left sends signal to buss 1 (L), panning centre sends signal to buss 3 (C), and panning right sends to buss 2 (R). Panning front to back sends a proportion of the signal (pre LCR pan) to the single, mono, rear buss. If the SS (Stereo Surround) switch is pressed, then the surround signal becomes discrete stereo. The stereo surround is again fed from pre the front pan to busses 5&6, but the same L-R pan is applied as exists on the front channels.

Normally, the centre position for any pan law has 5dB attenuation in the centre position, and a proportion of the signal spreads from the L and R to the C speaker. If a more discrete output is required, then switching on the Wide setting results in no signal on the L and R speakers when the pan is in the centre position.

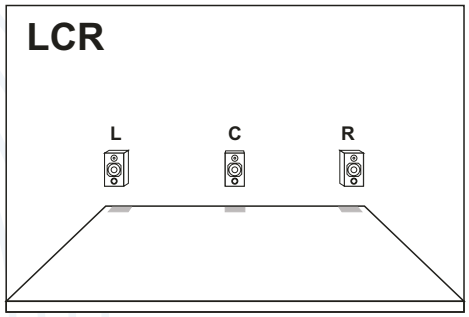

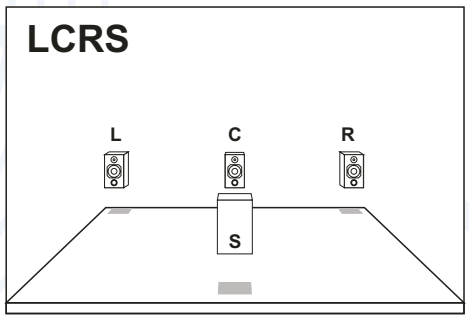

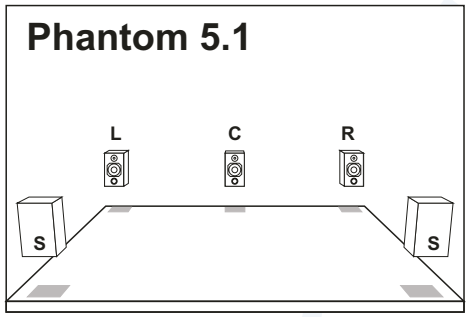

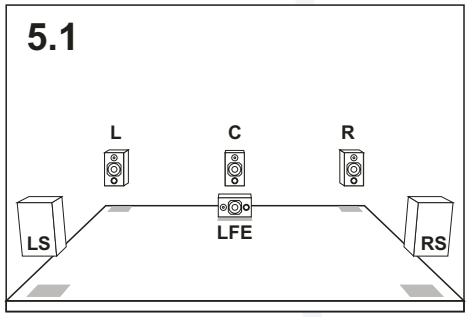

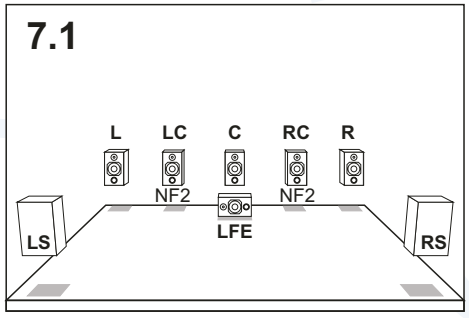

If a multitrack buss is not being used for surround, then it can be used as a standard buss. For instance, you can route to an LCRS stem on busses 1-4 and then also a stereo pan on busses 5 and 6, controlled from the same pan pot.

Notice that it is the channel which is set to the pan format, not the busses it is quite possible to pan one channel across a stem as LCRS, whilst panning another across the stem as mono and yet another as LCRS. Also, pressing only SS and not LCRS on a channel results in busses 5 and 6 being fed from the rear output of the F-R pot; the first four busses are then available for stereo panning, giving an LRSS output. The stereo buss is available at all times.

Busses 7-12 outputs are fed back into the channels to act as a monitor matrix. This allows routing of the mix output to any buss or busses. This is a switched matrix; it is not possible to surround pan across these busses, except as odd-even stereo panning. This matrix can be extended with busses 1-6, if they are free.

In addition to the conventional level, pan, mute and solo, a 1:1 switch bypasses the level and pan control on a channel, allowing the buss or playback signal to be re-assigned to a stem for monitoring or as the programme.

Main Monitor System

The main monitor system has ten speaker outputs: Left, Centre, Right, Surround/LFE, Left Surround, Right Surround, Nearfield1 Left, Nearfield1 Right, Nearfield2 Left and Nearfield2 Right. Individual mutes are provided for each of the speaker outputs, along with master mute, solo and dim

An input selector allows the monitor section to be fed from the main stereo buss, busses 1 to 6, busses 7 to 12 or external sources. An output format selector bank allows all formats from mono to 7.1 to be monitored, including phantom 5.1 (derived from LCRS). The output format is a derived signal: if the input is set to 5.1, and the speaker format set to stereo, then the monitor system will automatically downmix the buss and output the result to L and R.

- **Mono** puts combined image of all busses on C speaker (or on L,R when normal stereo source is selected);
- **Stereo** puts derived stereo image of all feeds on L and R speakers;
- **LCRS** creates a derived image from a 5.1 source, and outputs it on L, C, R, S/LFE speakers;
- **Phantom 5.1** mixes LS and RS and outputs the result on LS and RS as a mono signal, plus normal feeds to L, C, R;
- **5.1** feeds all six speakers with their respective buss;
- **7.1** feeds the six main speakers with their respective buss, and in addition sources the LF (Left Fill) and RF (Right Fill) from the stereo buss and feeds them to the NF2 speakers.

When 7.1 is selected, the secondary nearfields are automatically switched in to serve as fill-in speakers (i.e. between left and centre, right and centre) and the two L,R bargraphs meter the LC,RC. The nearfield level pot does not act on the NF2 level in this case, but NF1 outputs are still available. Solo returns the L,R bargraphs to the solo buss.

Two switches are provided to control the assignment of the master fader. If Fader>Main is pressed, then the master fader controls the main buss level, and the stereo buss level is set to unity. If Fader>Stereo is pressed, then the stereo buss is controlled by the master fader, and the main buss level is set to unity. In both unity cases, the VCAs are physically bypassed for the cleanest signal path. Pressing both switches allows the master fader to control both stereo and multiformat busses, e.g. 7.1

Encoder/Decoder Setup

The encoder In switch enables an encoded LtRt signal to be placed on a stereo programme output.

If the Encoder In switch is operated, then the main six busses are routed, pre-fader, to six encoder outputs on the console rear panel. The main stereo buss outputs are then switched to source from the encoder returns. Hence, Main Outputs 7 and 8 are the encoded form of outputs 1-6, and may be routed to tape as an 8-wide stem (5.1 + L_tR_t), or to the input of a Dolby® E encoder.

If the Decoder In switch is operated, then the input to the monitor matrix is sourced from the outputs of a decoder insert, available on the console rear panel.

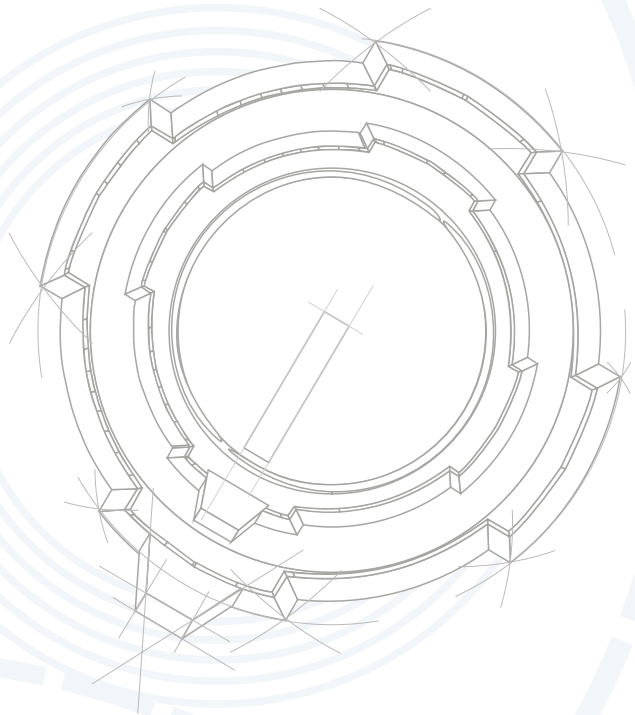

M1RN - Mono Input Module

Inputs - XLR connector for mic and line inputs. Inserts and direct outputs are provided on 1/4" (6.35) jacksockets.

Mix to ST - Assigns the signal in the mixdown path to the main ST buss.

CH to ST - Assigns the signal in th channel path to the main ST buss

Routing - Allow the channel path signal to feed busses 1-12 in any combination. If multiple busses are selected, the channel path pan pot pans between odd and even busses. Busses 1-6 may be designated as a 6-wide multiformat buss.

Mix to TKS - Switches the mixpath to the routing instead of the channel path

LCRS - The LCRS switch designates busses 1-4 as LCRS busses.

SS - Designates busses 5&6 as stereo surround busses. When both LCRS and SS are in, buss 4 becomes the LFE channel and is sourced post fader. When busses 1-6 are used for multiformat recording (5.1), busses 7-12 can be used for monitoring.

Wide - Used in multichannel mode to increase divergence when panning.

Aux 3&4 to TKS - Connects the multitrack to the Aux 3&4 controls.

Aux Sends - There are eight aux sends on the M1RN, arranged as dual concentric pots. The channel sends (Auxes 5-8) are mono post fader sends normally fed from the channel path. The mixdown sends (Auxes 1-4) are mono post fader sends fed from the mix path. Switches allow all of the auxes to be fed from either path and sends 1-4 may be switched pre-fader.
The Aux Mute switch cuts off all output from sends 1&2 and may be automated via Supertrue™.

48V - Applies 48V phantom power to the mic input.

Gain Mic (Line) - The gain control adjusts the sensitivity of the input. Mic range is 0dB to +66dB, Line range is -9dB to +15dB.

Chan Pan - Panning left pans to the odd multitrack and stereo left, panning right pans to even multitrack busses and stereo right. In the centre there is a drop of -3dB.

1:1 - Bypasses the level and pan control and sets the channel path to unity. The multitrack routing and AFL are derived directly after the mute switch.

Channel Level Control - This is the main level control for the channel. It has a maximum of 10dB of gain.

AFL - Provides post fade signal to the monitor speakers replacing the selected source.

Channel Mute - Cuts off all output from the channel and utilises soft mute for click-free switching. The switch can be automated from Supertrue™.

Ø **Phase -** Reverses the phase of the input.

Ins to Ch - Places the insert point and the phase switch in the channel path.



Meter off Chan - Causes the meter to follow the channel signal. This is sourced from the Mic/Line amp. When not selected the meter follows the mix path. The signal is sourced from tape/buss amps.

Buss - Switches the input source between Tape and Buss.

Mix Gain - Adjusts the Buss/Tape level. The range is ±20dB.

Input Flip - Allows the mic or line signal to be fed to the mix path instead of the Tape/Buss. At the same time the tape or buss signals are fed to the channel path.

Filters In - Switches the filters in/out of circuit.

Side-Chain - Puts both filters into the Virtual Dynamics side chain.

High Pass - The high pass filter has a frequency range of 25Hz to 500Hz, with a slope of 12dB per octave.

Low Pass - The low pass filter has a frequency range of 2kHz to 500Hz with a slope of 12dB per octave.

Equaliser - The 4 band swept EQ is designed by the legendary Mr. Rupert Neve.
HF range is 2kHz to 20kHz. The HF band can be switched between a bell (Q factor 1.5) and shelving response.
HMF range is 500Hz to 12kHz with a variable Q control of 0.5 to 2.
LMF range is 40Hz to 1kHz with a similar Q control.
LF range is 30Hz to 300Hz with a switched response similar to the HF band.
All bands have a cut/boost continuously variable ±18dB.

Front/Rear Pan - When panned 'front' full signal is fed to the Mix Pan pot. When panned 'rear' full signal is fed to the surround busses.

Mix Pan - Feeds the signal to the stereo mix and multitrack busses odd and even. In LCRS mode it feeds left buss 1, right buss 2 and centre to buss 3. In SS mode it also pans to SL buss 5 and SR buss 6. The LFE is fed directly to buss 4.

Fader Flip - Swaps the mix path VCA fader with the channel path level control.

AFL - Provides post fade signal to the monitor speakers, replacing the selected source.

Mix Mute - Mix Mute cuts off all the output from the mix path and utilises soft mute for click-free switching. The switch can be automated from Supertrue™.

Direct Output - A direct output is provided which is sourced post fader.

Virtual Dynamics™ - AMEK Virtual Dynamics™ is fitted as standard and controls each channel VCA via the automation system. Each channel can be assigned one of a choice of several software driven gain controllers.

Mono Input Module Block Diagram

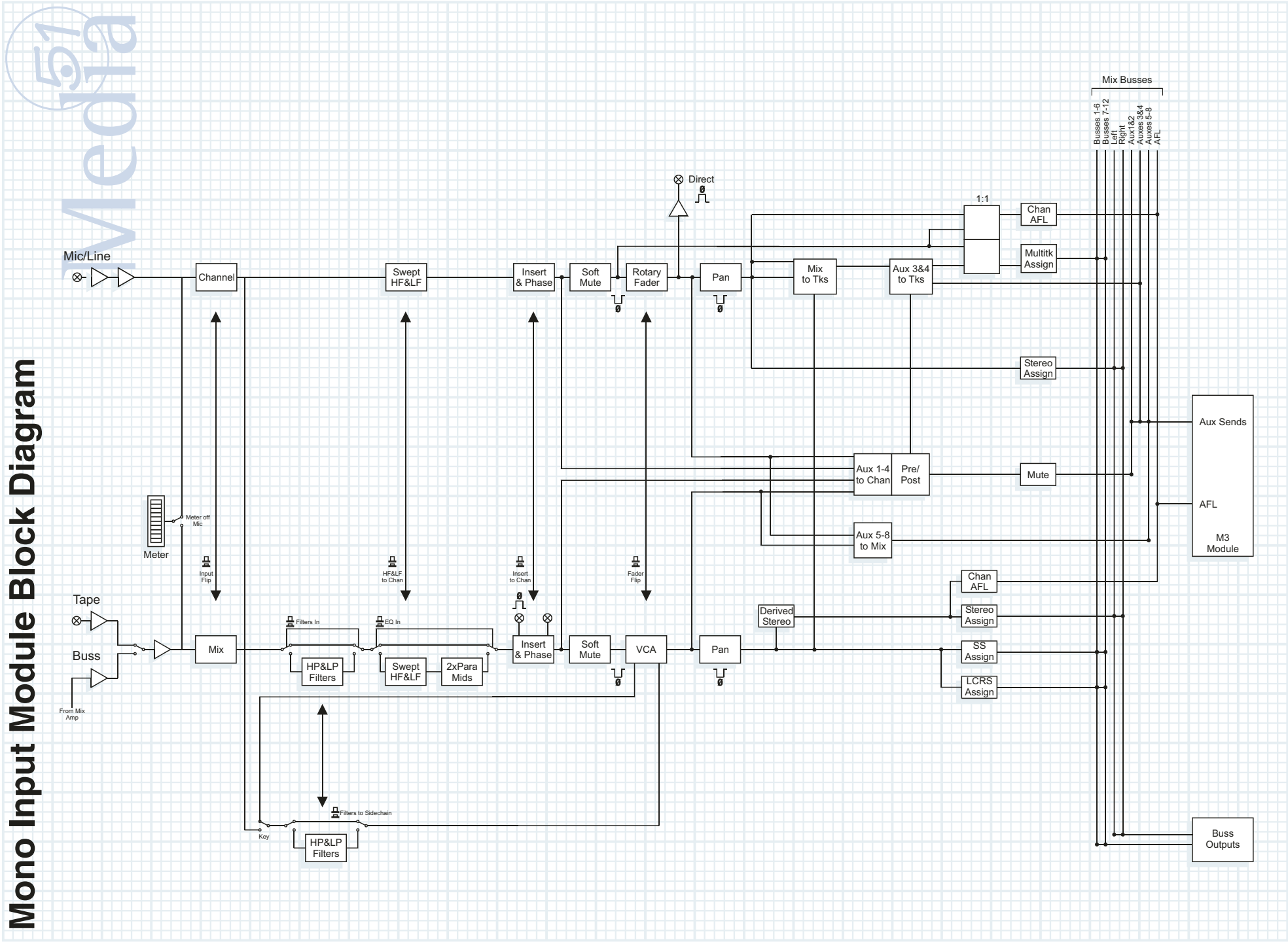

M2 - Stereo Return Module

Inputs - The M2 module uses ¼" (6.35mm) jacksockets for inputs.

Routing - The 12 buss outputs are assigned in pairs from the multitrack routing section from the top of the M2 module. This is sourced from the output of the FX return section

Groups to Tracks - Switches the routing from the output of the FX return section to the output of the stereo line path. This would either be the group signal or any signal patched in through the line input jacks.

Aux Sends - There are 8 aux sends on the M2 stereo group module, arranged as two groups of four dual concentric pots. All auxes have unity gain when the controls are fully clockwise. Auxes 5-8 are mono post fader sends, which are normally fed from the FX return path. Selecting Group allows sends 5-8 to be fed from the stereo line input section.
These four sends can be switched pre-fader by selecting the Pre 5-8 switch.
Aux sends 1-4 are mono post fader sends normally fed from the stereo line path. Selecting the AUX 1-4 to FX switch allows sends 1-4 to be fed from the FX return path. Pressing the AUX 3&4 Mute switch cuts off all outputs from sends 3 & 4.
The Mute can also be automated from Supertrue™.

Mono - Combines the left and right signal to the FX return section.

Fx Gain - The Gain control adjusts the sensitivity of the jack input for the FX return section. The range is ±20dB.

Low Pass Filter - The LP switch inserts a Low Pass filter into the signal path. The -3dB point is fixed at 6kHz at 12dB per octave.

FX Pan - The FX Pan control feeds the signal to the Stereo mix and the mutitrack busses. Panning left pans to the odd multitrack and stereo left, panning right pans to the even multitrack busses and Stereo right. In the centre position there is an attenuation of 3dB.

ST - Assigns the signal in the FX returns path to the main stereo buss.

FX Level Control - The FX Level is the main level control for the effects return. It has 10dB of gain when the control is fully clockwise.

AFL - The FX return AFL switch provides a post fade signal to the monitor speakers replacing the selected source.

FX Mute - The FX Mute switch cuts off all output from the effect return channel and utilises a soft mute for click free switching. The switch can also be automated from Supertrue™.

Stereo Group / Stereo Line Input. - Normally this section acts as a stereo subgroup. The input comes from the multitrack routing switches on each M1RN module. Alternatively, this section can be used as a stereo line input. Any signal connected to the stereo input jacks will override the group signal.

Mono Left - The Mono Left switch applies the left hand signal to the left and right of the module.

Mono Right - The Mono Right switch applies the right hand signal to the left and right hand side of the module. If both switches are pressed together the left and right signals appear on both sides of the module @ -6dB.



RØ (Phase) - The RØ (Phase) switch reverses the phase of the right hand side signal only. The switch should normally be released.
Pressing Mono L, Mono R and RØ together allows M/S signal to be decoded with the left and right sum signal appearing on the left side and the left and right difference signal on the right side.

St Line Gain - The Stereo Line Gain controls adjust the sensitivity of both the left and right jack inputs. The Line range is ± 20dB.

Low Pass Filter - The LP switch inserts a low pass filter into the signal path and acts on both sides of the stereo signal. The -3dB point is fixed at 6kHz @ 12dB per octave.

Stereo Equaliser - The EQ section has four bands. The HF and LF sections have a shelving response with the LF having selectable frequencies. The MID sections have a bell response at selectable frequencies.

The HF cut and boost control gives a range of ±18dB at a frequency of 12kHz.
The HMF cut and boost control gives a range of ±14dB. The frequency switch selects between 3.5kHz and 7kHz.
The LMF cut and boost control gives a range of ±14dB. The frequency switch selects between 350Hz and 700Hz.
The LF cut and boost control gives a range of ±18dB. The frequency switch selects between 40Hz and 80Hz. Using the X3 switch multiplies the selected frequencies by 3 giving a range of 120Hz to 240Hz.

High Pass Filter - The HP switch inserts a high pass filter into the signal path and acts on both sides of the stereo signal. The -3dB point is fixed at 120Hz @ 12dB per octave.

The EQ In switch inserts the equaliser into the signal path.

Group Pan - The Group Pan control feeds the signal to the Stereo mix and the mutitrack busses. Panning left pans to the odd multitrack and stereo left, panning right pans to the even multitrack busses and Stereo right. In the centre position there is an attenuation of 3dB.

Group to ST - Assigns the signal in the group path to the main stereo buss.

Fader Flip - Pressing Fader Flip swaps the effects return level control with the automated stereo subgroup VCA fader.

AFL - The Group AFL switch provides a post fade signal to the monitor speakers replacing the selected source.

Group Mute - The Group Mute switch cuts off all output from the channel. The switch can also be automated from Supertrue™.

M3 - Master Module

ST - The ST button selects the mix fader to control the Stereo mix buss. When de-selected the VCAs are bypassed and the path set to unity gain.

Wide - Normally the VCAs on busses 1-6 are bypassed. The WIDE button selects the mix fader to control the main mix buss. Pressing both switches allows the fader to control both stereo and main busses for 7.1 output.

Insert Points - This switches in the 8-wide insert point across the stereo buss and the main busses.

Meter Switching - Meter source selection is controlled by 4 switches providing the following functions:
Input - Monitor input, post decoder insert. Any source selected to the speakers. (default setting)
Playback - (monitor busses 7-12)
Direct - (main busses)
SPK - Speaker outputs.
The speakers are metered before the mute switches, providing information for all signals which contribute to the selected format, even if the format determines that the speaker may be muted. In any format, when a Solo or Mono is pressed, the appropriate speaker meter will display the corresponding signal. All other meters will continue to display any relevant signal. This can be useful, for instance, to indicate the effects of mono build-up.

Monitor Source Switches - Monitor sources are selected by a pair of illuminated bank switches which toggle between a choice of five stereo sources or five wide format sources:

Stereo Bank - The five stereo sources are: **ST1** (external) This input can be switched for -10dBV rather than +4dBu signals. **ST2** (external), **ST3** (external), **Lt Rt, Stereo Buss.**

Wide Bank - The five wide sources are:
Ext 1, Ext 2, Ext 3, Ext 4, Direct/Playback
WIDE sources may be combined (summed together) by making multiple selections.

Direct/Playback - Selecting DIR/PB (Direct /Playback) allows a choice between monitoring Direct or Playback signals.

DEC (Decoder) - This button inserts the encode/decode chain into the monitor path.

ENC (Encoder) - This routes Lt Rt to the stereo buss output. (It can also be used to route any alternative signal to the stereo buss).
The ENC switch also provides a safety function in broadcast situations where Lt Rt is the normal program. If an unencoded stereo mix of the same material is available on the stereo mix, the Encoder In switch can toggle between the two.

Mode Switches - These provide alternative functions for the speaker mute and format switches.
Format - SPK Mute is the default mode of operation.
P/D Solo - SPK Solo provides Solo functions for each of the Plackback/Direct monitor inputs and the speakers.
P/D Mute - Input Cut provides mutes for each of the



Plackback/Direct monitors and mutes inputs to monitor system after the decoder insert, but before the metering point. Direct - Playback provides individual Direct/Playback switching for monitor input paths 1-6.

Solo Mode - When the normal stereo source selection is made, the AFL appears on the L&R speakers. When any multiformat selection is made, AFL appears in mono on the centre speaker.
The meters always read the actual level of a stereo pair, whereas the audible level will depend on signal content.
Solo in Place will operate as normal whether in a stereo or multiformat operational mode.
Solos of the Direct/Playback inputs are not controlled by the Solo Level control and do not feed the AFL metering. Since they need to represent the actual level at the Direct/Playback inputs, they are heard at normal monitoring level and can be metered on the main meters.

Speaker Format Switches - The Speaker Format switches monitor or provide phantom/downmix images in the selected format.

Downmixing - Downmixing should preferably be carried out within the Encode/Decoder system (e.g. Dolby) as this provides more control over downmix parameters. However, the console provides a default downmixing system.
The following formats are provided. All unnecessary input sources and speakers are muted:
Mono - puts a combined image of all available feeds for the format selected on the C speaker (or on L+R when normal stereo source is selected) - inputs 7-8 are cut.
Stereo - puts a derived stereo image of all available feeds on L & R.
LCRS -provides a derived LCRS image.
5.1 -provides a 5.1 image.
7.1 - sources LC and RC from the stereo buss and enables metering on the two aux bargraphs. 7.1 automatically enables the NF2 (nearfield) monitors as the LC and RC outputs. Pressing NF1 provides a derived stereo on nearfield NF1.
6.1 can be monitored by selecting 7.1 and using a discrete signal on speaker 7 or 8 while muting the unused path.
Monitoring in DTS format, necessitates re-patching of speakers and/or machine tracks.

24 high-resolution, peak reading LED bargraph meters are fitted for multirack metering. When modules 1-24 are in Tape mode, they read the level from either the multitrack machine or any line level source plugged into the Tape input jack. Switching any module to Buss reads the corresponding buss output. The meters may also be switched to read the channel input..

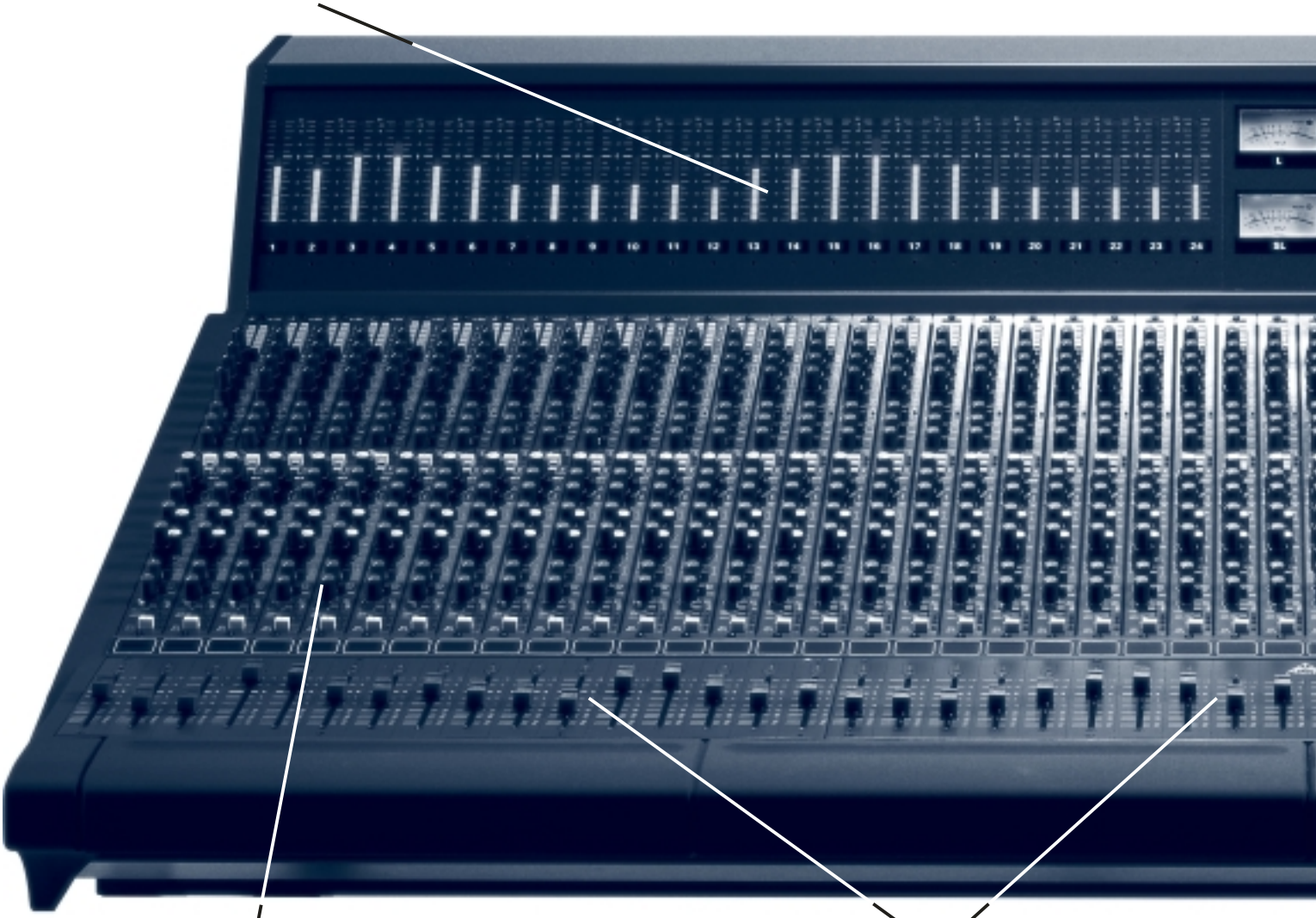

M1RN Mono Input Modules

M4, M5 Fader Panels

Dimensions

Side Elevation

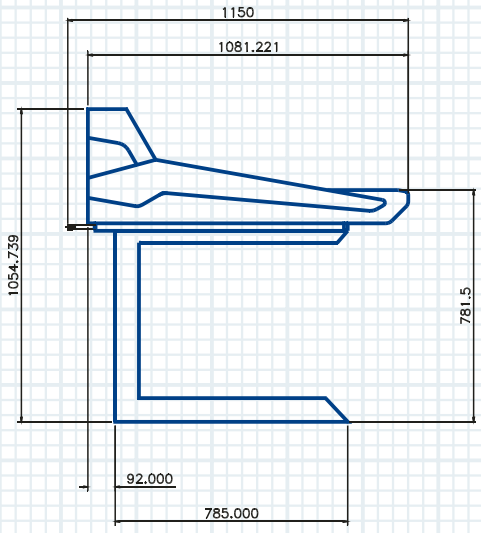

Front Elevation 48 Pos + Jbay

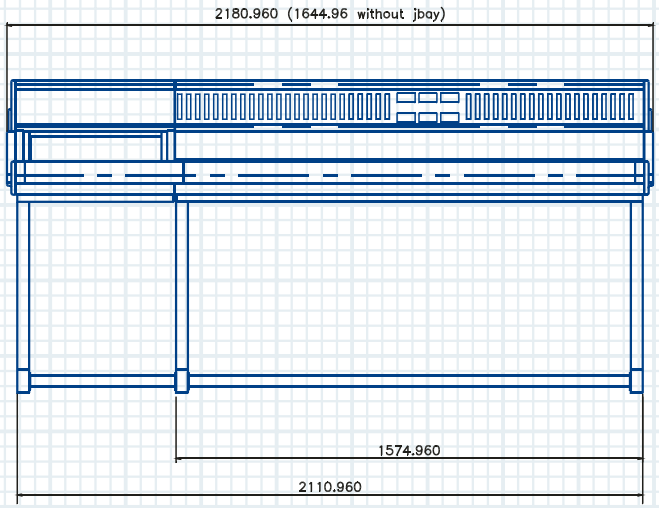

Six expanded scale VU meters are provided for L, C, R, S, LS and RS. These are each fitted with a peak LED and follow the peak/VU ballistics selection. These meters can be sourced off:
Busses 1-6
Busses 7-12
Monitor Inputs
Speaker Outputs

The stereo meters read the stereo monitor sources or stereo output signals. Any solo or AFL signal may also be routed to these meters by pressing the appropriate AFL switch. In 7.1 mode these read LC and RC

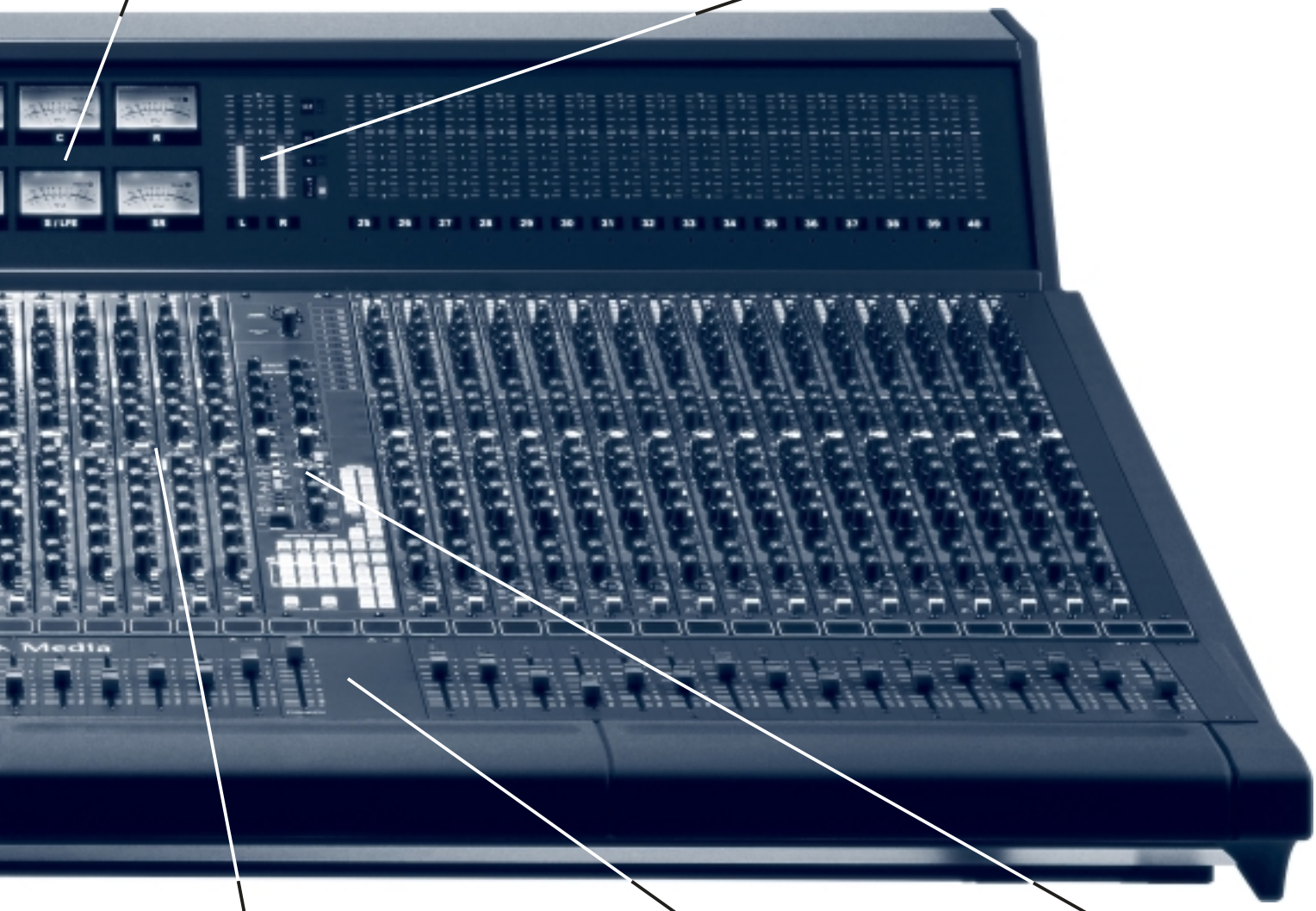

M2 Stereo Return Modules

M6 Master Fader Panel
(Position of Optional Joystick Panel)

M3 Monitor Module

Front Elevation 28 Pos + Jbay

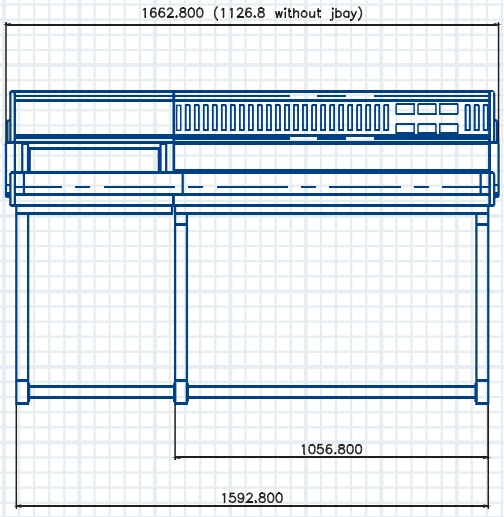

Optional Jackbays

Media 51 can be supplied with optional jackbay units. Each unit accepts 12U of 19" rackmount equipment and extends into the meterbridge fo rthe installation of OEM equipment.

Main Outputs Block Diagram

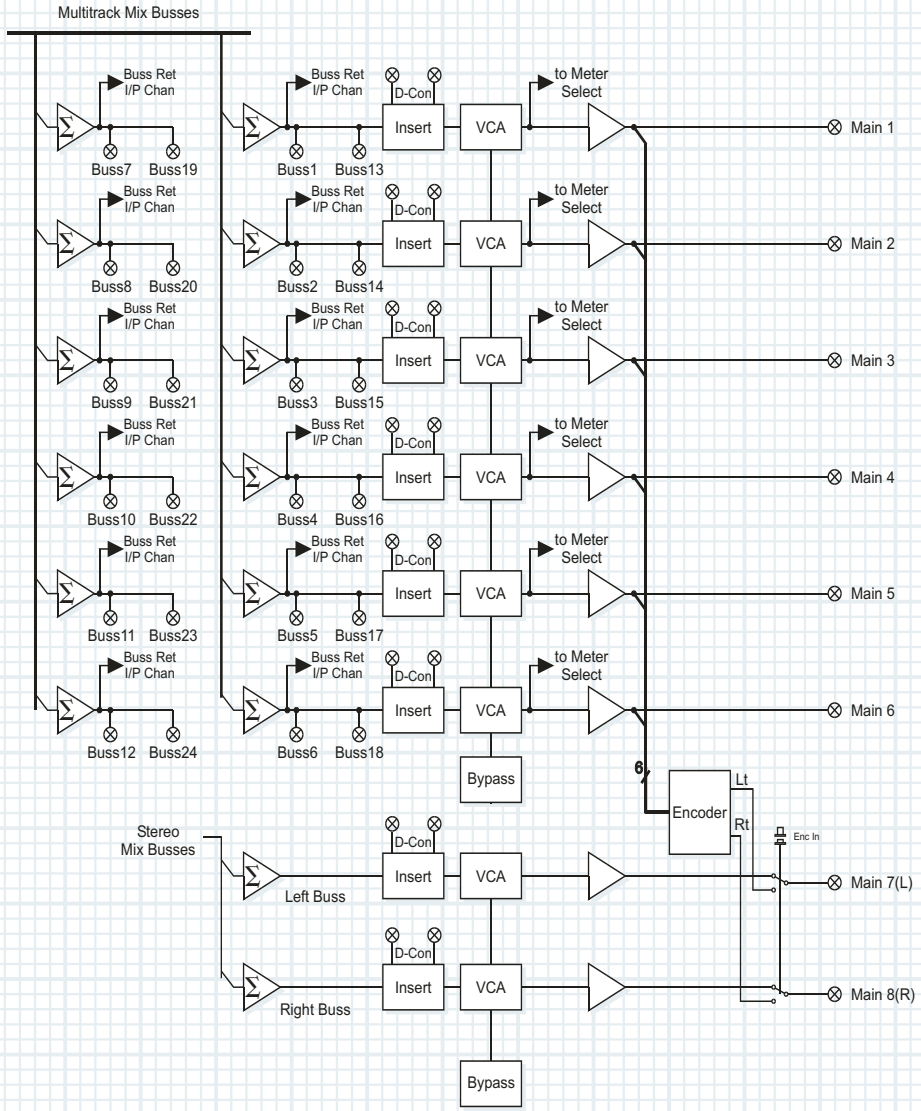

Monitor System Block Diagram

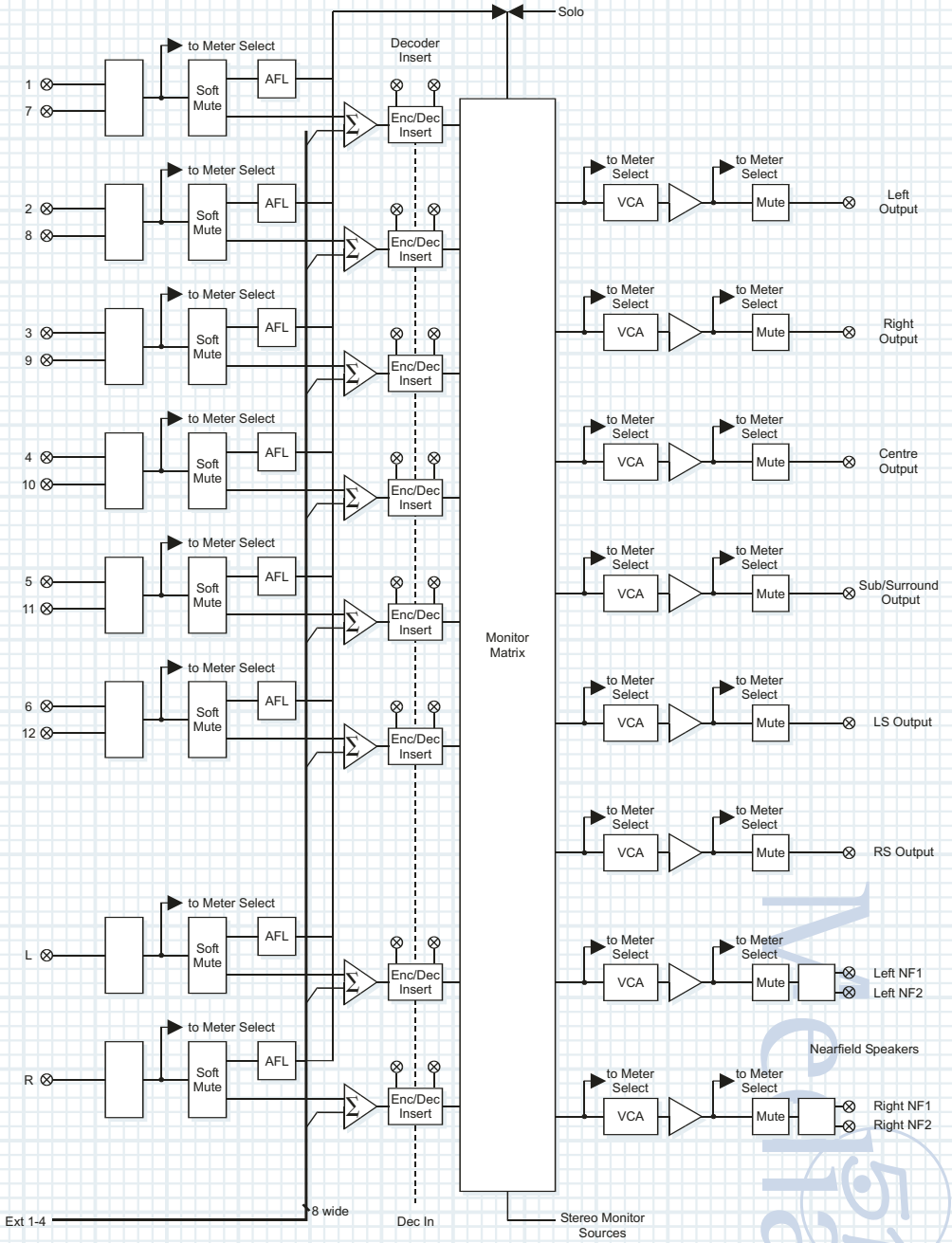

Supertrue™ Automation

Where functionality, flexibility and operational ease converge.

Supertrue™ is a console automation system exclusively developed by AMEK. It is a powerful, easy to operate system incorporating fader and switch automation, Visual FX, Virtual Dynamics™ and Recall as standard. We understand that functionality is of paramount importance to you. That's why Supertrue's feature set ensures that you don't have to compromise.

Since being introduced in 1989, Supertrue's has proved itself to be a console automation system of the highest calibre. Its pedigree is confirmed by the fact it now encompasses the largest installed user base of any other system of its type in the world.

In-built flexibility allows you the freedom to work the way you choose. Operation of Supertrue™ is logical and practically instinctive. Freelance producers/engineers are quickly able to drive the automation system, typically they have either used the system before, or they find it so simple and logical to operate that the learning curve is always a short one. This makes commercial sense.

You can trust in the fact that at AMEK we also have an ongoing commitment to Supertrue™. Since its introduction we have invested considerable time and effort in Supertrue's continuous development. Through this commitment and by listening to the ideas and suggestions of our customers worldwide we have been able to raise its operational standard and enhance its features to an outstanding level. We will not stop here though, you can take comfort in the knowledge that once you become an AMEK customer you will continue to receive the benefits of our advances in Supertrue™ for many years to come.

Supertrue™ is operated from a main screen, where various options and sub-routines are accessed through drop-down windows or from the seven menus.

Mix Processor

Supertrue™ has an extensive off-line editing system, the Mix Processor, which allows the manipulation of Mix data. One Mix can be Merged into another, Repeated in one part of the Mix at another timecode position, Time Shifted to follow edits and other time saving functions such as Erase, Trim, Copy and Swap speed up production work.

Synchronisation

For sound-to-picture applications, Supertrue™ can synchronise to incoming SMPTE and as an option provide machine control.

Cue List

The Cue List is especially useful in Post Production, allowing the triggering of external events - such as sound FX and music cues - and internal events, such as Mutes or Fades - to 1/4 frame accuracy. Cues can also be deleted or copied to new timecode positions, using the Edit submenu within the Cue List.

Recall

The Media 51 offers full recall of all parameters. The Recall system allows the positions of all knobs and switches to be stored, except the AFL/Solo switches and of course the Supertrue automated functions. Settings can be saved into the computer before running a mix.
The Recall system's AutoScan procedure speeds console setup. When a recall is activated, the computer scans the console and only pauses when it finds an incorrectly set control. It then brings up a graphics display of the module's controls. The control is adjusted until it matches the target position.

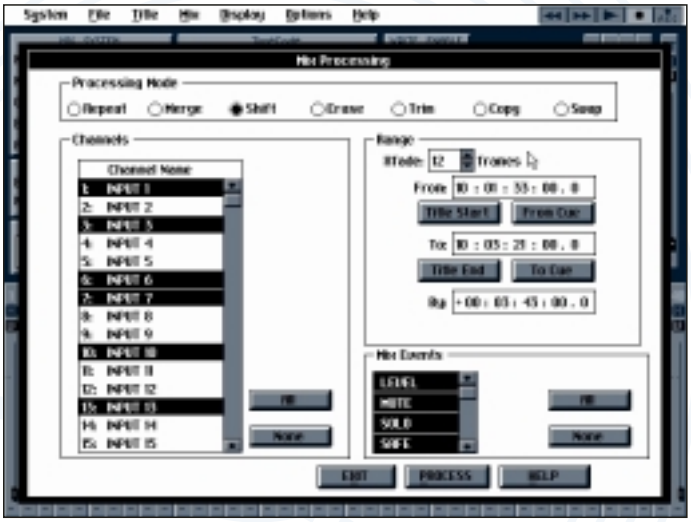

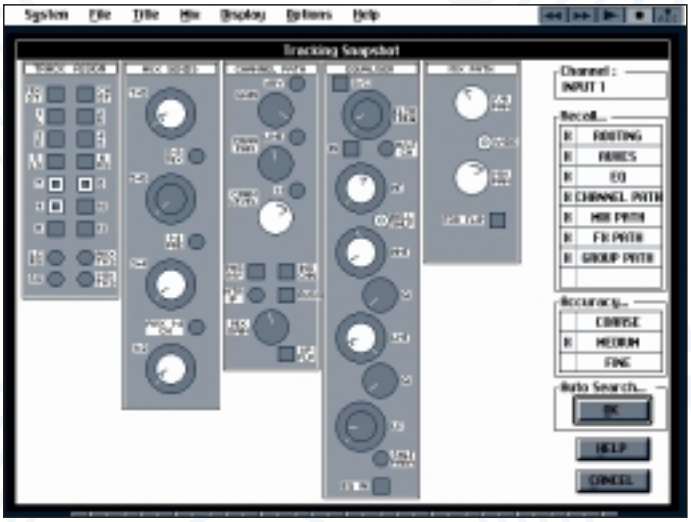

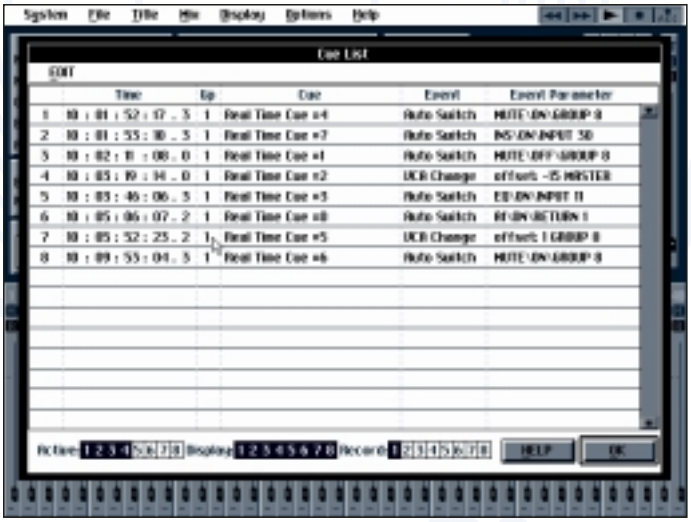

Virtual Dynamics™

Amek Virtual Dynamics™

Fitted as standard, this unique software manipulation of the console's hardware processors allows each VCA fader to have its own Dynamics control device.
Virtual Dynamics™ is based on digital control of all parameters and therefore gives the user the ability not only to specify gain contours with great accuracy but also to produce gain control effects difficult to emulate with standard analogue hardware. Supertrue™ also allows the user to store favoured settings, either within the Dynamics library or with the Mix.
Virtual Dynamics™ units are resident within the software and can be called to the screen at any time, offering a choice of any one of the ten available devices.



Easy Gate

A simplified gate device, fast and easy to setup. Includes settings for threshold, range and release time with a switchable 'fast' attack mode.



Gate

The standard general purpose gate, similar to the Easy Gate with added variable attack and hold times.



Super Gate

A fully-featured gate with all of the standard gate's functionality plus manual/auto hysteresis, peak, decay, mask time, variable gain and a switchable release curve (log).



Easy Compressor

A quick and simple compressor, includes variable settings for threshold and compression with switchable attack and release modes.



Compressor

The standard compression device. Variable settings for threshold, attack, release, compression ratio and make-up gain. Includes a 'soft' setting to provide a gradual transition after the threshold is reached.



Dual Compressor

A complex compression device with an expander section and compressor with two thresholds and compression ratios.



Limiter

A limiting device with variable ratio, enabling true limiting at 10:1 or lesser values for alternative forms of compression.



Autopanner
An autopanner provides image shifting across two channels. This is achieved by the device controlling the level of the faders once panning has been set. Autopanner events are triggerable and variable points with variable divergence can be set. A variety of other options make this a very flexible tool.



Expander

A straightforward expansion device with variable threshold, ratio, attack, hold and release times and expansion range.



Expander/Compressor

This device enables you to combine expansion and compression on a single channel.

Joystick Panel

The optional M6a motorised joystick panel is fitted in the master fader position and has the following facilities:

Mode Switches

Mono Input to LCRS Output

This mode provides two, tracking, LCRS panners. Mono input A is taken from D-connector input 1 and mono input B is connected to D-connector input 5. Both panners can be assigned to the LCRS busses individually.

An application of this system might be to feed the signal to input A and to fit a delay between inputs 1 and 2 to provide a panned reverb field.

Mono Input to 8-way Output (5.1 or 7.1)

This mode provides a single panner from D-connector input 1, which will pan around the sequence L, LC, C, RC, R, RS, S, and LS.

Input 5 on the D-connector can still be used to mix an additional signal into the LS, RS, LC and RC paths.

Stereo Input to LCRS Output

This mode provides two, tracking, LCRS panners. Stereo input A is taken from D-connector inputs 1(L) and 2(R). Stereo input B is connected to D-connector input 5 (L) and 6 (R). Both panners can be assigned to the LCRS busses individually.

Direct Input to LCRS Output

This mode provides two, tracking, LCRS panners from two LCRS inputs. The joystick alters the balance between all of the signals.

Direct Input to 8-way Output.

This mode provides a single 8-wide panner. The joydtick alters the balance between all of the signals.

Assignment Switches

Individual assignment switches are provided for each buss. In any LCRS mode of operation, buttons 5-8 provide assignment for the second panner (B) to LCRS busses (1-4).

The REV switch reverses the LS and RS (5 and6) operation. This allows crossing of signals in LCRS mode and can be used in 8-wide modes to provide accurate diagonal moves by using the edge of the joystick.

Operational Switches

An automated soft mute switch is provided for both A and B paths. In any 8-wide mode the switch for path A has control and mute switch B is disabled.

An automated SEL switch is provided. This activates automation functions on both the X and Y axes. Two divergence switches provide 4 fixed divergence settings.

The expand switch introduces a fixed all-pass filter on the L path output to provide image enhancement at high frequencies, particularly during stereo operation. It only operates on the Left Front speaker to avoid signal cancellations on paths that are derived from the left input source. The process provides up to 360 degrees lag for high frequency signals. The effect will only be apparent on signals that include an additional unfiltered output.

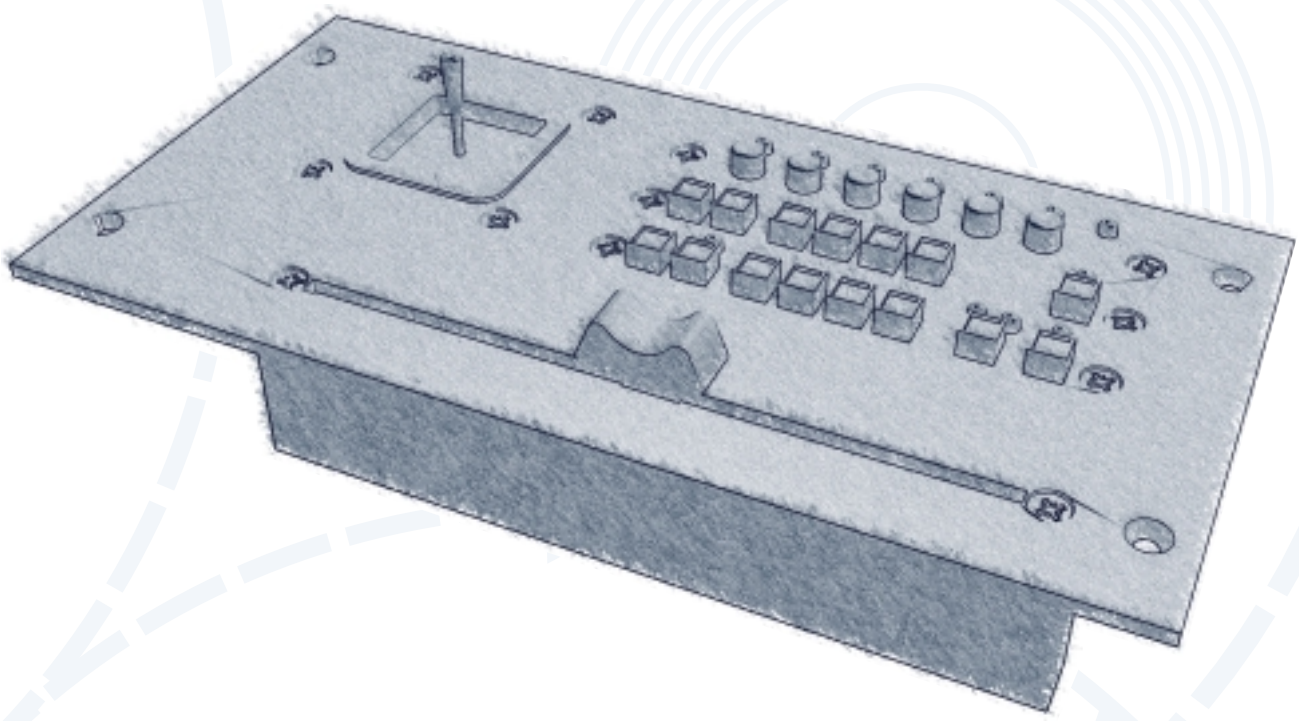

Schedule of Connections

Key				
	X	XLR Connector	B	Balanced Circuit
	O	Jacksocket	U	Unbalanced Circuit
	D	D-type Connector		

M1 - Mono Input Module

X	B	Mic/Line Input
O	U	Prefade Insert Send
O	U	Prefade Insert Return
O	U	Direct Output
O	B	Tape Input
O	B	Buss Output

M2 - Stereo Return Module

O	B	FX Return Left
O	B	FX Return Right
O	B	Stereo Line Return Left
O	B	Stereo Line Return Right

M3 - Monitor Module

O	B	Aux Master Outputs
D	B	Insert Sends Busses 1-8
D	B	Insert Returns Busses 1-8
D	B	Main Outputs 1-8
D	B	Ancillary - Encoder
D	B	Ext 1 8tk External Input
D	B	Ext 2 8tk External Input
D	B	Ext 3 8tk External Input
D	B	Ext 4 8tk External Input
D	B	Misc - Meter, Headphones, Studio Mono, Levels.
D	B	Playback Inputs
D	B	Stereo Inputs
D	B	Encoder Sends
D	B	Decoder Returns
D	B	Speaker Outputs
X	B	Talkback Mic

Technical Specification

Mic Amplifier
(Measured at the insert send)

Frequency Response (150 Ohm source)
Unity gain 10Hz to 200kHz (-1.5dBu)
+66dB gain 10Hz to 200kHz (-3.5dBu)

EIN Noise DIN (150 Ohm source)
Unity gain -98dBu
+66dB gain -128dBu

Distortion at 1kHz level = +10dBu
Unity gain 0.001%
Max gain 0.05%

CMRR at 1kHz level = +10dBu
Unity gain -71dBu
+66dB -70dBu

Maximum Input Level
Unity gain +14dBu
+66dB gain -44dBu

Line Amplifier
(Measured at the insert send)

Gain Range -9dB to +15dB centre “0”

Frequency Response
Unity Gain 10Hz to 200kHz (-1dBu)

Noise DIN at the Insert Send
Unity Gain -94dBu

Distortion at 1kHz
Level at +20dBu 0.002%

CMRR at 1kHz +20dBu
Unity Gain -65dBu

Maximum Input Level
Unity Gain +22dBu

Tape and Buss Return Amp

Gain Range -20dB to +20dB centre “0”

Frequency Response
Unity Gain 10Hz to 200kHz (-0.5dBu)

Noise DIN
Unity Gain -93dBu

Distortion at 1kHz
Level at +20dBu 0.001%

CMRR at 1kHz +20dBu
Unity Gain -63dBu

Maximum Input Level
Unity Gain +22dBu

Crosstalk at 1kHz
Tape to buss -103dBu
buss to Tape -101dBu

Crosstalk at buss 1 at 1kHz
Chan to Monitor -98dBu
Monitor to Chan -98dBu

Filters (Variable High and Low Pass filters at 12dB per octave)

High Pass 25Hz to 500Hz

Low Pass 2kHz to 30kHz

Noise DIN at the insert send, filters in
Unity Gain -94dBu

Distortion 1kHz at insert send, filters in
Level at +10dBu 0.002%

Equaliser

High Frequency
Cut/Boost +/- 18dB
Frequency Range 2kHz to 20kHz
Q 1.5

High Mid Frequency
Cut/Boost +/- 18dB
Frequency Range 500Hz to 12kHz
Q 0.5 to 2

Low Mid Frequency
Cut/Boost +/- 18dB
Frequency Range 40Hz to 1kHz
Q 0.5 to 2

Low Frequency
Cut/Boost +/- 18dB
Frequency Range 30Hz to 300Hz
Q 0.7

Noise DIN at insert send, EQ in and set flat, all pots at centre
Unity gain -85dBu

Distortion 1kHz at insert send, EQ in
Level at +20dBu 0.003%

Direct Output (from Line input)

Frequency Response
Unity gain 10Hz to 200kHz (-2dBu)

Noise DIN
Unity gain -94dBu

Distortion 1kHz at buss out
+20dBu 0.0025%

Maximum Output Level +22dBu

Channel Mute

Cut off at ST buss out, level=+10dBu
1kHz -101dBu

Channel Pan

Cut off at ST buss out, level=+10dBu L&R
1kHz -63dBu

Mix Mute

Cut off at ST buss out, level=+10dBu
1kHz -100dBu

Mix VCA Tape input to stereo buss

Cut off at +10dBu
1kHz -84dBu

Frequency Response
Unity Gain 10Hz to 180kHz (-3dBu)

Noise DIN
Unity Gain -87dBu

Distortion 1kHz at stereo buss
+10dBu 0.013%

Maximum Output Level +22dBu

Frequency Response

Line Input to buss Output
10Hz to 180kHz -3dB

Line Input to Main Insert Send
10Hz to 180kHz -3dB

Line Input to Main Output
10Hz to 120kHz -3dB

Line Input to Aux Output
10Hz to 150kHz -3dB

Line Input to Spk Output
10Hz to 90kHz -3dB

Distortion (at +10dBu, 1kHz)

Line Input to buss Output 0.0025%

Line Input to Main Insert Send 0.0025%

Line Input to Main Output
VCA 0.004%
Bypass 0.003%

Line Input to Aux Output 0.008%

Line Input to Spk Output 0.006%

Noise DIN (22Hz to 22kHz, at Unity Gain)

	1 ch	44 ch
Line Input to buss Output	-93dBu	-77dBu
Line Input to Main Insert Send	-93dBu	-77dBu
Line Input to Main Output	-87dBu	-76dBu
Line Input to Aux Output	**Pots closed** -80dBu	**Pots open** -75dBu
Line Input to Spk Output	-84dBu	

Typical weights:

44 position console - 220kg net.
44 position console with jackbay - 270kg net.

28 position console - 170kg net.
28 position console with jackbay - 230kg net.

Typical Power Consumption:

44 position console - 800W
28 position console - 650W

Mic Input Freq. Response - (Mic input at unity gain, measured at direct out)

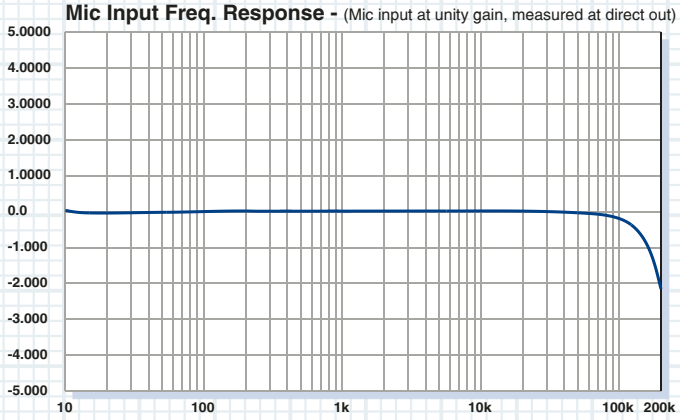

Mic Amp to Direct Output Frequency Response at Unity Gain

Great care has been taken to maintain excellent bandwidth, the graph above shows that at 10Hz the response is totally flat, giving superb low frequency reproduction. At high frequency the bandwidth is extended to -2dB at 200kHz to ensure there is no degradation of high frequency signals in the audio band.

Distortion (Mic input at unity gain, measured at direct out)

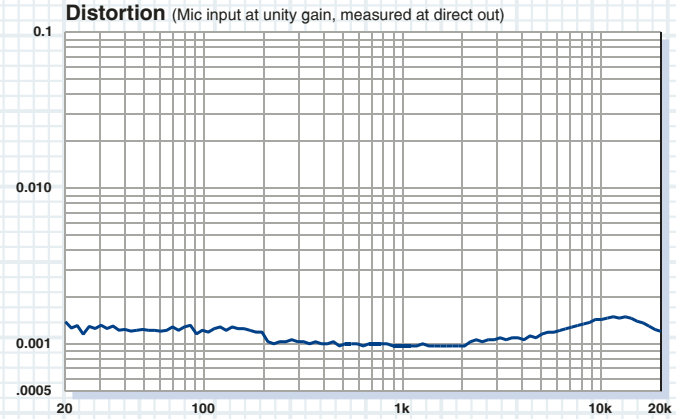

Mic Amp Distortion at Unity Gain, Measured at the Direct Output. (Level= +10dB)

The Mic Amplifier and following circuitry is capable of very low distortion levels, less than 0.002%, 20Hz to 20kHz as shown in the graph above.

Filters

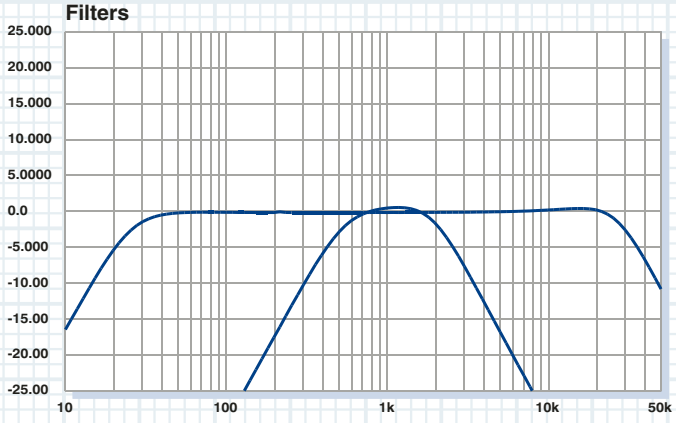

Equaliser - High Frequency

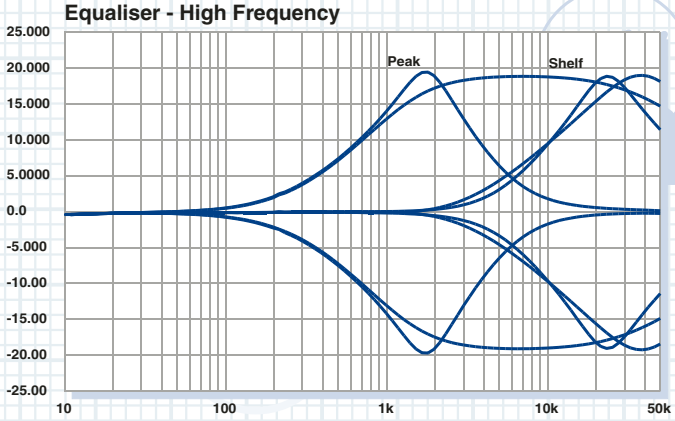

Equaliser - High Mid Frequency

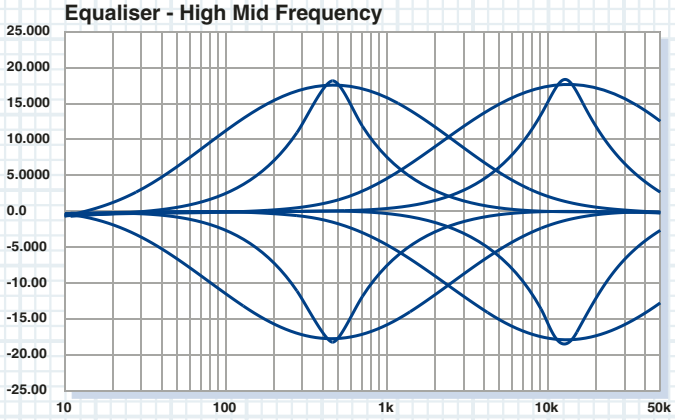

Equaliser - Low Mid Frequency

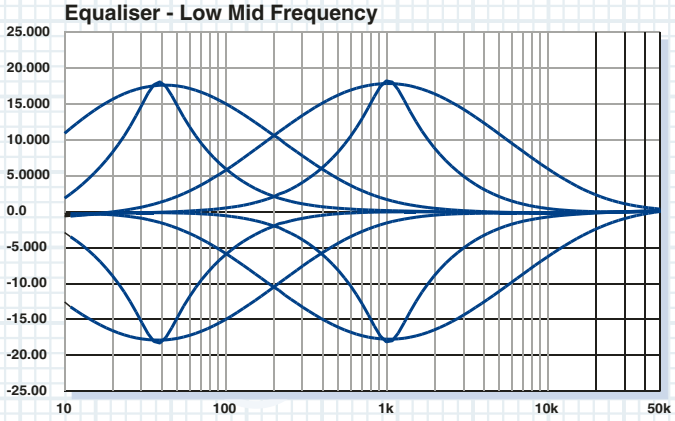

Equaliser - Low Frequency

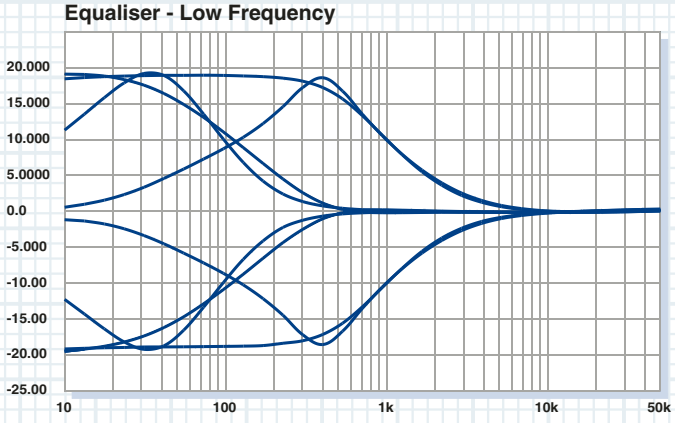

*All measurements taken on a Media 51, 44 input frame with automation running. Test equipment: Audio Precision System One.
All results are gain compensated.

AMEK

A Harman International Company



International Headquarters
Langley House
Third Avenue
Trafford Park
Manchester
M17 1FG

Tel: +44 (0) 161 868 2400
Fax: +44 (0) 161 873 8010
Web: www.amek.com
Email: amek@amek.com



US Headquarters
1449, Donelson Pike
Airpark Business Centre 12
Nashville
TN37217

Tel: +1 888 286 9358
Fax: +1 615 360 0273



Los Angeles
2740, W Magnolia Blvd
#102
Burbank
CA91505

Tel: +1 800 585 6875
Fax: +1 818 973 1622



Tokyo
3-5-14, Konan
Minato-ku
Tokyo
108-0075

Tel: +81 (0) 3 5707 0575
Fax: +81 (0) 3 5707 0599

The company has an established policy of seeking improvements to the design, specifications and manufacture of its products. Alterations take place continually, often without prior notification outside the company. The contents of the company's literature must not be regarded as an infallible guide to the specifications available despite considerable effort to produce up-to-date information. No literature constitutes an offer for sale of any particular console or product. The company's officially appointed distributors and representatives will advise on any changes when the circumstances of the enquiry permit.
Dolby AC-3, Dolby Pro Logic, Dolby Surround, Dolby E and Dolby Digital are trademarks of Dolby Laboratories.
Sony SDDS is a trademark of Sony Corporation.

All trademarks acknowledged.

© 2000 Harman International Industries Ltd.